Automatica 44 (2008) 2909–2915

Contents lists available at ScienceDirect

Automatica

journal homepage: www.elsevier.com/locate/automatica

Brief paper

Tracking and synchronisation for a class of PWA systems☆

N. van de Wouw [a,*], A. Pavlov [b]

[a] Eindhoven University of Technology, Department of Mechanical Engineering, P.O. Box 513, NL 5600 MB Eindhoven, The Netherlands
[b] NTNU, Department of Engineering Cybernetics, N7491, Trondheim, Norway

ARTICLE INFO

Article history:
Received 29 May 2007
Received in revised form
21 March 2008
Accepted 6 April 2008
Available online 23 October 2008

Keywords:
Tracking control
Master–slave synchronisation
Switching systems
Discontinuous systems
Observer design

ABSTRACT

In this paper, the tracking problem for a class of discontinuous piecewise affine (PWA) systems is addressed. We propose an observer-based output-feedback control design, consisting of a feedforward, a piecewise affine feedback law and a model-based observer, solving the tracking problem. These synthesis results can also be employed to tackle the master–slave synchronisation problem for PWA systems. It is shown that for certain classes of PWA systems the design is characterised in terms of linear matrix inequalities. The results are illustrated by application to mechanical systems with discontinuous friction characteristics.

1. Introduction

The asymptotic tracking of prescribed reference signals is a central problem in control theory. For smooth nonlinear systems, a vast amount of literature exists on this topic. Well-known approaches towards tackling the tracking control problems are formulated in the scope of the output regulation problem, feedback linearisation techniques, inversion-based tracking, Lyapunov-based control design, backstepping designs, passivity-based designs, designs based on the notion of absolute stability, and many more.

Currently, PWA systems are receiving wide attention due to the fact that the PWA framework (Sontag, 1981) provides a way to describe dynamic systems exhibiting switching between a multitude of linear dynamic regimes, see also Carmona, Freire, Ponce, and Torres (2002), Heemels, Camlibel, and Schumacher (2002), Mosterman and Biswas (2000) and Voros (2002). Such switching can be due to piecewise-linear characteristics such as dead-zone, saturation, hysteresis or relays or result from piecewise linear approximations of complex nonlinear dynamics. Results on the stabilization problem (of equilibria) for PWA systems are presented in e.g. Bemporad and Morari (1999), Chen, Zhu, and Feng (2004), Feng (2002), Habets and van Schuppen (2004), Johansson (2002), Johansson and Rantzer (1998), Rodrigues and How (2003) and Rodrigues and Boyd (2005). Because of the intimate relation between PWA systems and linear parameter-varying systems, it is important to note the extensive literature on the control of this type of systems, in which the focus is on stabilisation with additional performance objectives (e.g. in terms of L_2-gain properties), see e.g. Apkarian, Gahinet, and Becker (1995) and de Souza and Trofino (2006) and references therein. For continuous PWA systems that can be represented in the form of a Lur'e system, stabilising output-feedback control designs are proposed in Arcak and Kokotović (2001). Despite many stabilisation results for PWA systems, results on the tracking problem for PWA systems are rare. The authors are aware of only one publication on this problem (Sakurama & Sugie, 2005), where a solution is presented for bimodal PWA systems.

In the current paper, we will propose solutions to the tracking control problem for a class of *multi-modal discontinuous* PWA systems via state feedback and observer-based output feedback designs. These control designs can also be employed to tackle the master–slave synchronisation problem for multi-modal discontinuous PWA systems. To the best of our knowledge no solutions to the tracking/synchronisation control problems for multi-modal discontinuous PWA systems have been reported in the literature. The presented results are based on recent research on convergence properties of PWA systems (Pavlov, Pogromsky, van de Wouw, & Nijmeijer, 2007; Pavlov, van de Wouw, & Nijmeijer, 2005).

The paper is structured as follows. In Section 2, the tracking problem and master–slave synchronisation problem for PWA

☆ This paper was not presented at any IFAC meeting. This paper was recommended for publication in revised form by Associate Editor Antonio Loria under the direction of Editor Hassan K. Khalil. This research was partially supported by the framework of the HYCON Network of Excellence, contract number FP6-IST-511368, and by the Netherlands Organisation for Scientific Research NWO.

* Corresponding author.
E-mail addresses: N.v.d.Wouw@tue.nl (N. van de Wouw), Alexey.Pavlov@itk.ntnu.no (A. Pavlov).

0005-1098/$ – see front matter © 2008 Elsevier Ltd. All rights reserved.
doi:10.1016/j.automatica.2008.04.015

systems are stated. In Section 3, we design state- and (observer-based) dynamic output feedback controllers solving the tracking problem for a class of multi-modal discontinuous PWA systems. An extension of these controllers fit to tackle the master–slave synchronisation problem is discussed in Section 4. Moreover, an example illustrating the results on synchronisation is presented for a mechanical motion system with discontinuous friction characteristics. Section 5 gives concluding remarks.

2. Problem formulation

Consider the state space $\mathbb{R}^n$ to be divided into polyhedral cells Λ_i, $i = 1, \ldots, l$, by hyperplanes given by equations of the form $\boldsymbol{H}_{ij}^{\mathrm{T}}\boldsymbol{x} + h_{ij} = 0$, such that $\Lambda_i \subset \left\{\boldsymbol{x} \in \mathbb{R}^n : \boldsymbol{H}_{ij}^{\mathrm{T}}\boldsymbol{x} + h_{ij} \geq 0\right\}$ and $\Lambda_j \subset \left\{\boldsymbol{x} \in \mathbb{R}^n : \boldsymbol{H}_{ij}^{\mathrm{T}}\boldsymbol{x} + h_{ij} < 0\right\}$, with $\boldsymbol{H}_{ij} \in \mathbb{R}^n$ and $h_{ij} \in \mathbb{R}$ for $\{i, j\} = 1, \ldots, l$ and $i \neq j$. We will consider piecewise affine (PWA) systems of the form

$$\begin{aligned} \dot{\boldsymbol{x}} &= \boldsymbol{A}_i\boldsymbol{x} + \boldsymbol{b}_i + \boldsymbol{B}\boldsymbol{u}, \quad \text{for } \boldsymbol{x} \in \Lambda_i, i = 1, \ldots, l, \\ \boldsymbol{y} &= \boldsymbol{C}\boldsymbol{x}. \end{aligned} \tag{1}$$

Here $\boldsymbol{B} \in \mathbb{R}^{n\times m}$, $\boldsymbol{C} \in \mathbb{R}^{q\times n}$, $\boldsymbol{A}_i \in \mathbb{R}^{n\times n}$ and $\boldsymbol{b}_i \in \mathbb{R}^n$, $i = 1, \ldots, l$, are constant matrices and vectors, respectively. The vector $\boldsymbol{x} \in \mathbb{R}^n$ is the state, the vector $\boldsymbol{y} \in \mathbb{R}^q$ is the measured output and the vector $\boldsymbol{u} \in \mathbb{R}^m$ is the control input.

In Section 3, we will design (dynamic) control laws for system (1) such that the corresponding closed-loop system is again a PWA system with a time-varying input. Solutions of such a closed-loop system are understood in the sense of Filippov (see Filippov (1988)). In Filippov's solution concept, given a differential equation with a discontinuous right-hand side, one can obtain a differential inclusion through a certain convexification procedure and the solutions of the original discontinuous differential equation are understood as solutions of this differential inclusion. In the results presented in Section 3, all the algebraic derivations for the (time-derivative of the) smooth Lyapunov function, which is exploited for stability analysis, are given for the variables lying in the continuity domain of the right-hand side of the system. In the same way as has been done in Pavlov et al. (2007) (with the original idea from Filippov (1988)), these statements allow us to conclude on the behaviour of solutions of the differential inclusion corresponding to the PWA system with a discontinuous right-hand side. Consequently, the explicit analysis of the differential inclusions arising from Filippov's solution concept can be avoided. In order to reduce the technicalities in the current paper, we refer to Pavlov et al. (2007) for further details.

The tracking problem considered in this work is formalised as follows:

Tracking problem. Design a control law for $\boldsymbol{u}$ that, based on information on the desired state trajectory $\boldsymbol{x}_d(t)$ and the measured output $\boldsymbol{y}$, renders $\boldsymbol{x}(t) \to \boldsymbol{x}_d(t)$ as $t \to \infty$ and the states of the closed-loop system are bounded.

To solve this problem, we adopt the following assumption:

Assumption 1. There exists $\boldsymbol{u}_{ff}(t)$ such that the desired solution $\boldsymbol{x}_d(t)$ satisfies

$$\dot{\boldsymbol{x}}_d = \boldsymbol{A}_j\boldsymbol{x}_d + \boldsymbol{b}_j + \boldsymbol{B}\boldsymbol{u}_{ff}(t) \tag{2}$$

for $\boldsymbol{x}_d \in \Lambda_j$, $j = 1, \ldots, l$, i.e. $\boldsymbol{u}_{ff}(t)$ can be considered to be a reference control (feedforward) generating $\boldsymbol{x}_d(t)$.

The master–slave synchronisation problem is also studied in this paper. In that scope, in addition to system (1), which we call a slave system, we consider an identical master system

$$\begin{aligned} \dot{\boldsymbol{x}}^m &= \boldsymbol{A}_j\boldsymbol{x}^m + \boldsymbol{b}_j + \boldsymbol{B}\boldsymbol{w}(t), \\ \boldsymbol{y}^m &= \boldsymbol{C}\boldsymbol{x}^m, \end{aligned} \tag{3}$$

for $\boldsymbol{x}^m \in \Lambda_j$, $j = 1, \ldots, l$, that is excited by $\boldsymbol{w}(t)$. Herein, $\boldsymbol{y}^m$ is the measured output of the master system. It is assumed that all solutions of the master system are bounded for $t \geq t_0$ (where t_0 denotes the initial time). The master–slave synchronisation problem is formulated as follows:

Master–slave synchronisation problem. Design a control law for the slave system (1) that, based on information on the measured outputs $\boldsymbol{y}$ and $\boldsymbol{y}^m$ and on $\boldsymbol{w}(t)$, renders $\boldsymbol{x}(t) \to \boldsymbol{x}^m(t)$ as $t \to \infty$ and the states of the closed-loop slave system are bounded.

3. Tracking control design

3.1. State-feedback design

Let us first adopt the perspective that the entire state can be measured, i.e. $\boldsymbol{C} = \boldsymbol{I}$ in (1), where $\boldsymbol{I}$ is the $n \times n$-identity matrix. Then, we adopt a control law decomposed into a feedforward part $\boldsymbol{u}_{ff}(t)$ and a PWA feedback part:

$$\boldsymbol{u}(\boldsymbol{x}, t) = \boldsymbol{u}_{ff}(t) + \boldsymbol{K}_i\boldsymbol{x} + \boldsymbol{d}_i - \left(\boldsymbol{K}_j\boldsymbol{x}_d(t) + \boldsymbol{d}_j\right) \tag{4}$$

for $\boldsymbol{x} \in \Lambda_i$, $\boldsymbol{x}_d(t) \in \Lambda_j$, $i, j = 1, \ldots, l$ and with $\boldsymbol{K}_i \in \mathbb{R}^{m\times n}$ and $\boldsymbol{d}_i \in \mathbb{R}^m$, $i = 1, \ldots, l$, being feedback parameters. The following result poses conditions under which asymptotic state tracking is achieved with controller (4).

Theorem 1. *Consider the system (1), with $\boldsymbol{C} = \boldsymbol{I}$. Suppose the desired trajectory $\boldsymbol{x}_d(t)$ satisfies Assumption 1 with $\boldsymbol{u}_{ff}(t)$ being the corresponding feedforward. If there exist $\boldsymbol{\mathcal{P}}_c \in \mathbb{R}^{n\times n}$, $\boldsymbol{\mathcal{Y}}_i \in \mathbb{R}^{m\times n}$ and $\boldsymbol{d}_i \in \mathbb{R}^m$, $i = 1, \ldots, l$, such that*

$$\begin{aligned} &\boldsymbol{\mathcal{P}}_c = \boldsymbol{\mathcal{P}}_c^{\mathrm{T}} > 0, \\ &\boldsymbol{A}_i\boldsymbol{\mathcal{P}}_c + \boldsymbol{\mathcal{P}}_c\boldsymbol{A}_i^{\mathrm{T}} + \boldsymbol{B}\boldsymbol{\mathcal{Y}}_i + \boldsymbol{\mathcal{Y}}_i^{\mathrm{T}}\boldsymbol{B}^{\mathrm{T}} < 0, \quad i = 1, \ldots, l, \end{aligned} \tag{5}$$

and for any pair of cells Λ_i and Λ_j having a common boundary given by $\boldsymbol{H}_{ij}^{\mathrm{T}}\boldsymbol{x} + h_{ij} = 0$ there exist vectors $\boldsymbol{G}_{ij} \in \mathbb{R}^n$, $\boldsymbol{M}_{ij} \in \mathbb{R}^m$ and a number $\gamma_{ij} \in \{0, 1\}$ such that

$$\boldsymbol{A}_i - \boldsymbol{A}_j = \boldsymbol{G}_{ij}\boldsymbol{H}_{ij}^{\mathrm{T}}, \tag{6}$$

$$\boldsymbol{b}_i - \boldsymbol{b}_j - \boldsymbol{G}_{ij}h_{ij} = -\gamma_{ij}\boldsymbol{\mathcal{P}}_c\boldsymbol{H}_{ij}, \tag{7}$$

$$\boldsymbol{\mathcal{Y}}_i - \boldsymbol{\mathcal{Y}}_j = \boldsymbol{M}_{ij}\boldsymbol{H}_{ij}^{\mathrm{T}}\boldsymbol{\mathcal{P}}_c, \tag{8}$$

$$\boldsymbol{d}_i - \boldsymbol{d}_j = \boldsymbol{M}_{ij}h_{ij}, \tag{9}$$

then $\boldsymbol{x}_d(t)$ is a globally exponentially stable solution of the closed-loop system (1), (4), with feedback gains $\boldsymbol{K}_i = \boldsymbol{\mathcal{Y}}_i\boldsymbol{\mathcal{P}}_c^{-1}$, and $\boldsymbol{d}_i$, $i = 1, \ldots, l$, satisfying (5)–(9). In particular, the tracking problem is solved.

Proof. See Appendix A.1. □

Remark 1. It is known that, for $\gamma_{ij} = 0$, conditions (6), (7) are equivalent to the continuity of the right-hand side of system (1), see e.g. Rodrigues and How (2003) and Pavlov et al. (2005). Due to the same result, conditions (8) and (9), after multiplication of (8) from the right by $\boldsymbol{\mathcal{P}}_c^{-1}$, guarantee the continuity of the function $\boldsymbol{v}(\boldsymbol{x}) = \boldsymbol{K}_i\boldsymbol{x} + \boldsymbol{d}_i$, for $\boldsymbol{x} \in \Lambda_i$, with $\boldsymbol{K}_i = \boldsymbol{\mathcal{Y}}_i\boldsymbol{\mathcal{P}}_c^{-1}$. This, in turn, implies the continuity of the controller $\boldsymbol{u}(\boldsymbol{x}, t)$ given in (4).

Remark 2. Condition (6) is a structural condition on the system and it uniquely determines G_{ij}. Conditions (5)–(9) are bilinear matrix inequalities (BMIs) in terms of $\boldsymbol{\mathcal{P}}_c$, $\boldsymbol{\mathcal{Y}}_i$, $\boldsymbol{d}_i$ and $\boldsymbol{M}_{ij}$. Solving BMIs is, in general, a computationally challenging problem. At the same time, in the case of (both continuous and discontinuous) PWA

systems with linear feedback (i.e. $\boldsymbol{K}_i = \boldsymbol{K}_j$, which corresponds to $\mathcal{Y}_i = \mathcal{Y}_j$, for all $i, j \in \{1, \ldots, l\}$, and $\boldsymbol{d}_i = \boldsymbol{0}$, for all $i \in \{1, \ldots, l\}$ in (4)) these conditions can be reduced to linear matrix inequalities (LMIs). More specifically, in the case of linear feedback we have that:

- (8) and (9) are satisfied for $\boldsymbol{M}_{ij} = \boldsymbol{0}$ $\forall i, j$ by linearity of the controller;
- (5) and (7) represent LMIs in terms of $\boldsymbol{P}_c$ and $\mathcal{Y}_i$ for fixed γ_{ij}, which can be either 0 or 1. Herein, $\gamma_{ij} = 0$ represents the case in which the vectorfield of (1) is continuous over the hyperplane between Λ_i and Λ_j and $\gamma_{ij} = 1$ represent the case in which the vectorfield of (1) is discontinuous over the hyperplane between Λ_i and Λ_j.

Clearly, for the case of linear feedback, LMI conditions are now available that provide a solution to the tracking problem and for which computationally efficient tools exist.

3.2. Observer design

In the next result, we propose an observer design for the discontinuous PWA system (1), which will ultimately be used in the context of an output-feedback controller solving the tracking problem.

Theorem 2. *Consider system (1). If there exist $\mathcal{P}_o \in \mathbb{R}^{n\times n}$ and $\mathcal{X} \in \mathbb{R}^{n\times q}$ satisfying the inequality*

$$\begin{aligned} &\mathcal{P}_o = \mathcal{P}_o^{\mathrm{T}} > 0, \\ &\mathcal{P}_o \boldsymbol{A}_i + \boldsymbol{A}_i^{\mathrm{T}} \mathcal{P}_o + \mathcal{X}\boldsymbol{C} + \boldsymbol{C}^{\mathrm{T}}\mathcal{X}^{\mathrm{T}} < 0, \quad i = 1, \ldots l, \end{aligned} \tag{10}$$

and for any pair of cells Λ_i and Λ_j having a common boundary given by $\boldsymbol{H}_{ij}^{\mathrm{T}}\boldsymbol{x} + h_{ij} = 0$ there exist a vector $\boldsymbol{G}_{ij} \in \mathbb{R}^n$ and a number $\gamma_{ij} \in \{0, 1\}$ satisfying

$$\boldsymbol{A}_i - \boldsymbol{A}_j = \boldsymbol{G}_{ij}\boldsymbol{H}_{ij}^{\mathrm{T}}, \tag{11}$$

$$\mathcal{P}_o\left(\boldsymbol{b}_i - \boldsymbol{b}_j - \boldsymbol{G}_{ij}h_{ij}\right) = -\gamma_{ij}\boldsymbol{H}_{ij}, \tag{12}$$

then the system

$$\begin{aligned} &\dot{\hat{\boldsymbol{x}}} = \boldsymbol{A}_{\hat{\imath}}\hat{\boldsymbol{x}} + \boldsymbol{b}_{\hat{\imath}} + \boldsymbol{B}\boldsymbol{u}(t) + \boldsymbol{L}(\hat{\boldsymbol{y}} - \boldsymbol{y}(t)), \\ &\hat{\boldsymbol{y}} = \boldsymbol{C}\hat{\boldsymbol{x}}, \end{aligned} \tag{13}$$

for $\hat{\boldsymbol{x}} \in \Lambda_{\hat{\imath}}$, $\hat{\imath} = 1, \ldots, l$ and with $\boldsymbol{L} = \mathcal{P}_o^{-1}\mathcal{X}$, is an observer for system (1) with globally exponentially stable error dynamics.

Proof. See Appendix A.2. □

With $\hat{\imath}$ we indicate the index that determines in which polyhedral cell $\Lambda_{\hat{\imath}}$ the observer state $\hat{\boldsymbol{x}}$ resides.

Remark 3. Given condition (11), which is a structural condition on system (1), conditions (10) and (12) are LMIs in terms of $\mathcal{P}_o$ and $\mathcal{X}$. This fact makes these conditions easy to verify.

Note that this observer guarantees exponentially stable observer error dynamics and does not require knowledge on the moment of switching of the system between distinct polyhedral cells Λ_i. We note that if system (1) exhibits a continuous vector field and can be represented as a Lur'e system, one can also use the circle criterion-based observer design from Arcak and Kokotović (2001). For Lur'e-type systems with set-valued, monotone nonlinearities in the feedback loop, passivity-based observer designs have been proposed in Juloski, Heemels, and Weiland (2005). For *bi-modal* piecewise linear systems, observer designs have been proposed in Heemels, Weiland, and Juloski (2007) and Juloski, Heemels, and Weiland (2002, 2007). For continuous PWA systems that can be formulated as Lur'e-type systems, the observer designs from Arcak and Kokotović (2001) and Juloski et al. (2002) are more general than (13). For general continuous PWA systems, one can also extend the observer design in (13) based on the ideas from Arcak and Kokotović (2001) and Juloski et al. (2002). However, we will not pursue such an extension in this paper. Observer-based output-feedback designs for PWA systems aiming at the stabilisation of *equilibria* (as opposed to the stabilisation of *time-varying trajectories* as considered in the current paper) have been reported in Rodrigues and How (2003).

3.3. Output-feedback design

Theorem 1 shows how to design a state feedback controller which, based on information on the state $\boldsymbol{x}$ and the desired state $\boldsymbol{x}_d(t)$, solves the tracking problem. Theorem 2 provides an observer design to asymptotically reconstruct $\boldsymbol{x}$ from the measured output $\boldsymbol{y}$ and input $\boldsymbol{u}$. In Theorem 3, we combine the proposed controller and observer to construct an output feedback controller solving the tracking problem.

Theorem 3. *Consider system (1) and a desired trajectory $\boldsymbol{x}_d(t)$ satisfying Assumption 1 with $\boldsymbol{u}_{ff}(t)$ being the corresponding feedforward. Under the conditions of Theorems 1 and 2, $(\boldsymbol{x}, \hat{\boldsymbol{x}}) = (\boldsymbol{x}_d(t), \boldsymbol{x}_d(t))$ is a globally exponentially stable solution of system (1) in closed loop with the controller*

$$\begin{aligned} &\dot{\hat{\boldsymbol{x}}} = \boldsymbol{A}_{\hat{\imath}}\hat{\boldsymbol{x}} + \boldsymbol{b}_{\hat{\imath}} + \boldsymbol{B}\boldsymbol{u} + \boldsymbol{L}(\hat{\boldsymbol{y}} - \boldsymbol{y}(t)), \\ &\hat{\boldsymbol{y}} = \boldsymbol{C}\hat{\boldsymbol{x}}, \\ &\boldsymbol{u} = \boldsymbol{K}_{\hat{\imath}}\hat{\boldsymbol{x}} + \boldsymbol{d}_{\hat{\imath}} - \left(\boldsymbol{K}_j\boldsymbol{x}_d(t) + \boldsymbol{d}_j\right) + \boldsymbol{u}_{ff}(t), \end{aligned} \tag{14}$$

for $\hat{\boldsymbol{x}} \in \Lambda_{\hat{\imath}}$, $\hat{\imath} = 1, \ldots, l$, $\boldsymbol{x}_d(t) \in \Lambda_j$, $j = 1, \ldots, l$, and with $\boldsymbol{K}_{\hat{\imath}} = \mathcal{Y}_{\hat{\imath}}\mathcal{P}_c^{-1}$, $\hat{\imath} = 1, \ldots, l$, and $\boldsymbol{L} = \mathcal{P}_o^{-1}\mathcal{X}$, i.e. the tracking problem is solved.

Proof. See Appendix A.3. □

Remark 4. For the case of a linear feedback law (i.e. $\boldsymbol{K}_i = \boldsymbol{K}_j$, which corresponds to $\mathcal{Y}_i = \mathcal{Y}_j$, for all $i, j \in \{1, \ldots, l\}$ and $\boldsymbol{d}_i = \boldsymbol{0}$, for all $i \in \{1, \ldots, l\}$ in (14)) applied to either continuous or discontinuous PWA systems, the conditions for the output-feedback design reduce to the LMI-conditions (5), (7), (10) and (12), with the additional structural requirement (6) (or equivalently (11)) on the plant.

4. Example on master–slave synchronisation for a motion control system

In this section we, firstly, demonstrate that the results on tracking, presented in Section 3, can readily be exploited to tackle the master–slave synchronisation problem and, secondly, present a motion control example for which the master–slave synchronisation problem is solved.

Indeed the master–slave synchronisation problem is closely related to the tracking problem considered in the previous section. One can easily see that for the state-feedback case ($\boldsymbol{C} = \boldsymbol{I}$), if the conditions of Theorem 1 are satisfied, then the controller

$$\boldsymbol{u} = \boldsymbol{w}(t) + \boldsymbol{K}_i\boldsymbol{x} + \boldsymbol{d}_i - \left(\boldsymbol{K}_j\boldsymbol{x}^m(t) + \boldsymbol{d}_j\right), \tag{15}$$

for $\boldsymbol{x} \in \Lambda_i$, $\boldsymbol{x}^m(t) \in \Lambda_j$, $i, j = 1, \ldots, l$, and with the corresponding parameters $\boldsymbol{K}_i$, $\boldsymbol{d}_i$, $i = 1, \ldots, l$, defined in Theorem 1, solves the master–slave synchronisation problem. In the output-feedback case ($\boldsymbol{C} \neq \boldsymbol{I}$), both states $\boldsymbol{x}$ and $\boldsymbol{x}^m$ are not available for feedback and we need to asymptotically reconstruct those states from the measured outputs $\boldsymbol{y}$ and $\boldsymbol{y}^m$, respectively. Similar to the output-feedback tracking control design, if the conditions of Theorem 3 are

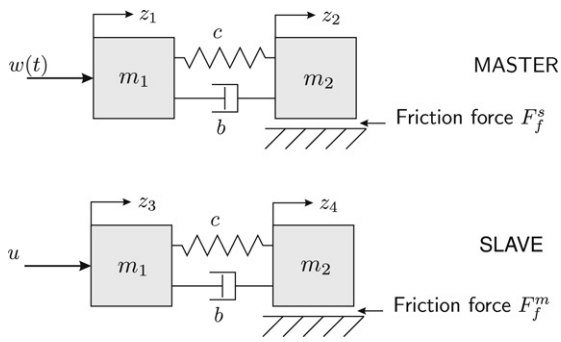

Fig. 1. Two identical motor–load systems having discontinuous friction characteristics.

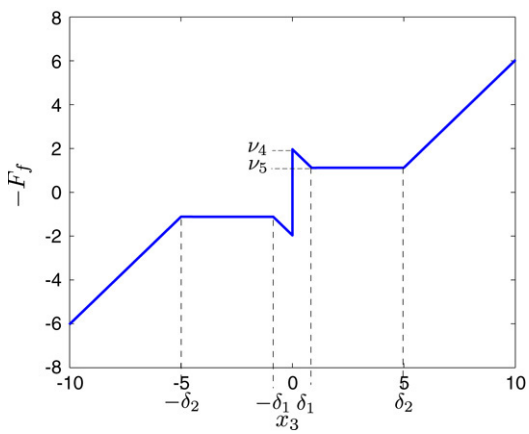

Fig. 2. PWA friction law.

satisfied, then the synchronising controller for the slave system is given by

$$\begin{aligned}
\dot{\hat{\boldsymbol{x}}} &= \boldsymbol{A}_{\hat{\imath}}\hat{\boldsymbol{x}} + \boldsymbol{b}_{\hat{\imath}} + \boldsymbol{B}\boldsymbol{u}(t) + \boldsymbol{L}(\hat{\boldsymbol{y}} - \boldsymbol{y}(t)),\\
\hat{\boldsymbol{y}} &= \boldsymbol{C}\hat{\boldsymbol{x}},\\
\dot{\hat{\boldsymbol{x}}}^m &= \boldsymbol{A}_{\hat{\jmath}}\hat{\boldsymbol{x}}^m + \boldsymbol{b}_{\hat{\jmath}} + \boldsymbol{B}\boldsymbol{w}(t) + \boldsymbol{L}(\hat{\boldsymbol{y}}^m - \boldsymbol{y}^m(t)),\\
\hat{\boldsymbol{y}}^m &= \boldsymbol{C}\hat{\boldsymbol{x}}^m,\\
\boldsymbol{u} &= \boldsymbol{K}_{\hat{\imath}}\hat{\boldsymbol{x}} + \boldsymbol{d}_{\hat{\imath}} - \left(\boldsymbol{K}_{\hat{\jmath}}\hat{\boldsymbol{x}}^m + \boldsymbol{d}_{\hat{\jmath}}\right) + \boldsymbol{w}(t),
\end{aligned} \tag{16}$$

for $\hat{\boldsymbol{x}} \in \Lambda_{\hat{\imath}}$, $\hat{\imath} = 1, \ldots, l$, and $\hat{\boldsymbol{x}}^m \in \Lambda_{\hat{\jmath}}$, $\hat{\jmath} = 1, \ldots, l$. The proof that this controller solves the master–slave synchronisation problem can be constructed in the same way as the proof of Theorem 3.

Next, we present an example illustrating the results on master–slave synchronisation for discontinuous PWA systems with PWA control laws. Hereto, we consider two identical mechanical motion systems, each consisting of a motor (inertia m_1), a flexible transmission (stiffness c and damping coefficient b) and a load (inertia m_2) which is subject to a friction force F_f, see Fig. 1. The position of the motor and load of the master are denoted by z_1 and z_2, respectively, whereas the position of the motor and load of the slave are denoted by z_3 and z_4, respectively. We will consider the dynamics of the master and slave in terms of the states $\boldsymbol{x}^m := \begin{bmatrix}(z_2 - z_1) & \dot{z}_1 & \dot{z}_2\end{bmatrix}^{\mathrm{T}}$ and $\boldsymbol{x}^s := \begin{bmatrix}(z_4 - z_3) & \dot{z}_3 & \dot{z}_4\end{bmatrix}^{\mathrm{T}}$, respectively. The mass m_1 of the master system is perturbed by a time-varying disturbance $w(t) = R\sin(\omega t)$ and the first mass of the slave system can be actuated by control input u. The masses m_2 of both the master and the slave systems are subject to friction forces F_f^m and F_f^s, respectively. We consider a discontinuous friction model (in order to account for the stiction effect of the friction) in a PWA form: $F_f^s(x_3^m) = -\left(\mu_i x_3^m + \nu_i\right)$, for $\boldsymbol{x}^m \in \Lambda_i$, $F_f^m(x_3^s) = -\left(\mu_i x_3^s + \nu_i\right)$, for $\boldsymbol{x}^s \in \Lambda_i$, $i = 1, \ldots, 6$. Herein, the sets Λ_i are defined by hyperplanes given by equations of the form $\boldsymbol{H}_{ij}^{\mathrm{T}}\boldsymbol{x} + h_{ij} = 0$, where $\boldsymbol{H}_{21}^{\mathrm{T}} = \boldsymbol{H}_{32}^{\mathrm{T}} = \boldsymbol{H}_{54}^{\mathrm{T}} = \boldsymbol{H}_{65}^{\mathrm{T}} = \begin{bmatrix}0 & 0 & 1\end{bmatrix}$, $\boldsymbol{H}_{43}^{\mathrm{T}} = \begin{bmatrix}0 & 0 & (\nu_4 - \nu_3)/m_2\end{bmatrix}$, $h_{21} = \delta_2$, $h_{32} = \delta_1$, $h_{43} = 0$, $h_{54} = -\delta_1$ and $h_{65} = -\delta_2$. See Fig. 2 for a representation of the PWA friction law in which a pronounced Stribeck (velocity weakening) effect is visible and viscous damping becomes dominant for higher velocities. Consequently, the dynamics of both systems is of the form (1), with $l = 6$, and the system matrices are given by

$$\boldsymbol{A}_i = \begin{bmatrix} 0 & -1 & 1 \\ \dfrac{c}{m_1} & -\dfrac{b}{m_1} & \dfrac{b}{m_1} \\ -\dfrac{c}{m_2} & \dfrac{b}{m_2} & -\dfrac{b+\mu_i}{m_2} \end{bmatrix}, \qquad \boldsymbol{B} = \begin{bmatrix} 0 \\ \dfrac{1}{m_1} \\ 0 \end{bmatrix}, \tag{17}$$

$$\boldsymbol{b}_i = \begin{bmatrix} 0 \\ 0 \\ \dfrac{-\nu_i}{m_2} \end{bmatrix},$$

for $i = 1, \ldots, 6$.

We adopt the following parameter values: $m_1 = 1$, $m_2 = 1$, $c = 100$, $b = 1$, $R = 3$, $\omega = 2\pi$, $\mu_1 = \mu_6 = -\mu_3 = -\mu_4 = 0.981$, $\mu_2 = \mu_5 = 0$, $\nu_1 = -\nu_6 = 3.785$, $\nu_2 = -\nu_5 = -1.120$, $\nu_3 = -\nu_4 = -1.962$, $\delta_1 = 0.858$ and $\delta_2 = 5$ (see Fig. 2 for the corresponding friction curve). For the sake of brevity, we consider the state feedback case, i.e. when both $\boldsymbol{x}^m$ and $\boldsymbol{x}^s$ are available for feedback. Let us check the conditions of Theorem 1. A solution for the LMI (5) is given by

$$\boldsymbol{\mathcal{P}}_c = \begin{bmatrix} 0.0342 & 2.2603 & 0 \\ 2.2603 & 349.1781 & 0 \\ 0 & 0 & 1 \end{bmatrix},$$

$\boldsymbol{\mathcal{Y}}_1 = \boldsymbol{\mathcal{Y}}_2 = \boldsymbol{\mathcal{Y}}_3$, $\boldsymbol{\mathcal{Y}}_4 = \boldsymbol{\mathcal{Y}}_5 = \boldsymbol{\mathcal{Y}}_6$, where the feedback gains corresponding to $\boldsymbol{\mathcal{Y}}_i$ are given by $\boldsymbol{K}_i = \boldsymbol{\mathcal{Y}}_i\boldsymbol{\mathcal{P}}_c^{-1} = \begin{bmatrix}-30 & -150 & -150\end{bmatrix}$, for $i = 1, 2, 3$, and $\boldsymbol{K}_i = \boldsymbol{\mathcal{Y}}_i\boldsymbol{\mathcal{P}}_c^{-1} = \begin{bmatrix}-30 & -150 & -152\end{bmatrix}$, for $i = 4, 5, 6$. Hence, conditions (8) and (9) hold for $\boldsymbol{M}_{21} = \boldsymbol{M}_{32} = \boldsymbol{M}_{54} = \boldsymbol{M}_{65} = \boldsymbol{0}$, $\boldsymbol{M}_{43} = -2m_2/(\nu_4 - \nu_3)$ and $\boldsymbol{d}_i = \boldsymbol{0}$, $i = 1, \ldots, l$. Conditions (6) and (7) hold with $\boldsymbol{G}_{ij} = \begin{bmatrix}0 & 0 & (\mu_j - \mu_i)/m_2\end{bmatrix}^{\mathrm{T}}$, $\forall i, j$, $\gamma_{21} = \gamma_{32} = \gamma_{54} = \gamma_{65} = 0$ and $\gamma_{43} = 1$. Hence, the synchronising controller exists and takes the form $\boldsymbol{u} = \boldsymbol{w}(t) + \boldsymbol{K}_i\boldsymbol{x}^s - \boldsymbol{K}_j\boldsymbol{x}^m$, for $\boldsymbol{x}^s \in \Lambda_i$ and $\boldsymbol{x}^m \in \Lambda_j$, which is a piecewise affine control law. Here, the solution to the BMIs has been obtained in an ad hoc fashion; for a discussion on techniques for solving BMIs arising from stabilisation problems for PWA systems, see e.g. Rodrigues and How (2003).

Remark 5. Note that the controller for the slave system could directly be employed to solve the tracking problem if we replace $w(t)$ by the feedforward inducing the desired trajectory to be tracked.

In Figs. 3–5, the state evolutions of the master and slave system, for the initial states $\boldsymbol{x}^m(0) = \begin{bmatrix}0 & 0 & 0\end{bmatrix}^{\mathrm{T}}$ and $\boldsymbol{x}^s(0) = \begin{bmatrix}-0.1 & 0 & 0.2\end{bmatrix}^{\mathrm{T}}$, are displayed. Time stepping methods (see Leine and Nijmeijer (2004) and references therein) are used to numerically compute solutions of the discontinuous PWA system. These figures confirm that full state synchronisation is achieved. Note that both systems converge to a solution on which the discontinuity of the friction law (at $x_3 = 0$) is addressed; see the sticking phases of the second mass of both systems in Fig. 5.

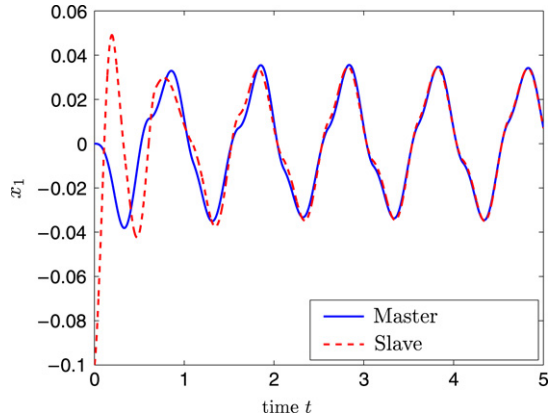

Fig. 3. State evolution $x_1(t)$ for master and slave system.

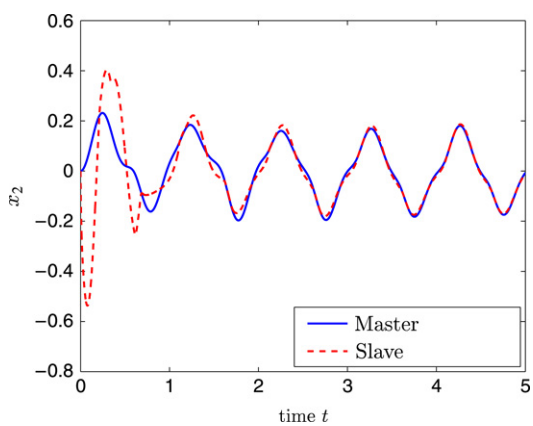

Fig. 4. State evolution $x_2(t)$ for master and slave system.

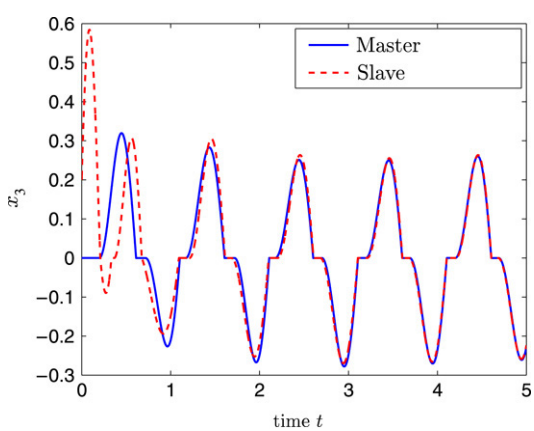

Fig. 5. State evolution $x_3(t)$ for master and slave system.

5. Conclusions

In this paper, the tracking and master–slave synchronisation problem for a class of discontinuous piecewise affine (PWA) systems with an arbitrary number of polyhedral cells is addressed. Firstly, we propose a piecewise affine state-feedback control law that solves these control problems. Moreover, a model-based-observer for discontinuous multi-modal PWA systems is proposed. Based on this state-feedback law and the observer, an output-feedback design is formulated. The synthesis conditions are formulated in terms of bilinear matrix inequalities. It is shown that for both continuous and discontinuous PWA systems with linear feedback laws, these conditions can be characterised in terms of linear matrix inequalities. The results are illustrated by application to mechanical systems with discontinuous friction characteristics.

Appendix. Proofs

A.1. Proof of Theorem 1

First we recall the following lemma which will be employed in this proof.

Lemma 1 (*Pavlov et al., 2007*). *Consider the PWA system*

$$\dot{\boldsymbol{x}} = \tilde{\boldsymbol{A}}_i\boldsymbol{x} + \tilde{\boldsymbol{b}}_i + \boldsymbol{B}\boldsymbol{w}(t) := \tilde{\boldsymbol{f}}(\boldsymbol{x}, \boldsymbol{w}(t)), \tag{A.1}$$

for $\boldsymbol{x} \in \Lambda_i$, $i = 1, \ldots, l$, and where $\boldsymbol{w}(t)$ is a time-varying input. Suppose there exists a matrix $\boldsymbol{P}$ satisfying

$$\begin{aligned} &\boldsymbol{P} = \boldsymbol{P}^{\mathrm{T}} > 0 \\ &\boldsymbol{P}\tilde{\boldsymbol{A}}_i + \tilde{\boldsymbol{A}}_i^{\mathrm{T}}\boldsymbol{P} < 0, \quad i = 1, \ldots, l, \end{aligned} \tag{A.2}$$

and for any pair of cells Λ_i and Λ_j having a common boundary given by $\boldsymbol{H}_{ij}^{\mathrm{T}}\boldsymbol{x} + h_{ij} = 0$ there exist a vector $\tilde{\boldsymbol{G}}_{ij} \in \mathbb{R}^n$ and a number $\gamma_{ij} \in \{0, 1\}$, satisfying

$$\tilde{\boldsymbol{A}}_i - \tilde{\boldsymbol{A}}_j = \tilde{\boldsymbol{G}}_{ij}\boldsymbol{H}_{ij}^{\mathrm{T}} \tag{A.3}$$

$$\boldsymbol{P}\left(\tilde{\boldsymbol{b}}_i - \tilde{\boldsymbol{b}}_j - \tilde{\boldsymbol{G}}_{ij}h_{ij}\right) = -\gamma_{ij}\boldsymbol{H}_{ij}. \tag{A.4}$$

Then, there exists $\alpha > 0$ such that the inequality $(\boldsymbol{x}_1 - \boldsymbol{x}_2)^{\mathrm{T}}\boldsymbol{P}(\tilde{\boldsymbol{f}}(\boldsymbol{x}_1, \boldsymbol{w}) - \tilde{\boldsymbol{f}}(\boldsymbol{x}_2, \boldsymbol{w})) \le -\alpha(\boldsymbol{x}_1 - \boldsymbol{x}_2)^{\mathrm{T}}\boldsymbol{P}(\boldsymbol{x}_1 - \boldsymbol{x}_2)$ holds for the matrix $\boldsymbol{P}$ satisfying (A.2), (A.4) for all $\boldsymbol{w} \in \mathbb{R}^m$ and $\boldsymbol{x}_1, \boldsymbol{x}_2 \in \mathcal{D}$, where $\mathcal{D} = \cup_{i=1}^{l} \operatorname{int} \Lambda_i$ is the union of the interior points of all cells Λ_i, $i = 1, \ldots, l$.

Consider the PWA system (1) in closed loop with the PWA control law (4), which yields the closed-loop dynamics described by

$$\begin{aligned} \dot{\boldsymbol{x}} &= \boldsymbol{A}_i\boldsymbol{x} + \boldsymbol{b}_i + \boldsymbol{B}\left(\boldsymbol{K}_i\boldsymbol{x} + \boldsymbol{d}_i - \left(\boldsymbol{K}_j\boldsymbol{x}_d(t) + \boldsymbol{d}_j\right) + \boldsymbol{u}_{ff}(t)\right) \\ &= (\boldsymbol{A}_i + \boldsymbol{B}\boldsymbol{K}_i)\,\boldsymbol{x} + (\boldsymbol{b}_i + \boldsymbol{B}\boldsymbol{d}_i) + \boldsymbol{B}\varphi(t) \\ &=: \boldsymbol{f}(\boldsymbol{x}, \varphi(t)) \quad \text{for } \boldsymbol{x} \in \Lambda_i, i = 1, \ldots, l, \end{aligned} \tag{A.5}$$

where $\varphi(t) := \boldsymbol{u}_{ff}(t) - \left(\boldsymbol{K}_j\boldsymbol{x}_d(t) + \boldsymbol{d}_j\right)$, for $\boldsymbol{x}_d(t) \in \Lambda_j$, $j = 1, \ldots, l$. System (A.5) is of the form (A.1) with $\tilde{\boldsymbol{A}}_i = \boldsymbol{A}_i + \boldsymbol{B}\boldsymbol{K}_i$, with $\boldsymbol{K}_i = \boldsymbol{\mathcal{Y}}_i\boldsymbol{\mathcal{P}}_c^{-1}$, $\tilde{\boldsymbol{b}}_i = \boldsymbol{b}_i + \boldsymbol{B}\boldsymbol{d}_i$, $i = 1, \ldots, l$, and $\boldsymbol{w}(t) = \varphi(t)$. By pre- and post-multiplying (5) by $\boldsymbol{\mathcal{P}}_c^{-1}$, we can conclude that system (A.5) satisfies (A.2) with $\boldsymbol{P} = \boldsymbol{\mathcal{P}}_c^{-1}$. By post-multiplying (8) by $\boldsymbol{\mathcal{P}}_c^{-1}$, premultiplying it by $\boldsymbol{B}$ and adding it to (6), we can conclude that (A.3) holds with $\tilde{\boldsymbol{G}}_{ij} = \boldsymbol{G}_{ij} + \boldsymbol{B}\boldsymbol{M}_{ij}$. By pre-multiplying (9) by $\boldsymbol{B}$, adding the resulting inequality to (7) and, subsequently, pre-multiplying the result by $\boldsymbol{\mathcal{P}}_c^{-1}$, we can conclude that (A.4) holds.

Consequently, there exists $\alpha > 0$ such that the inequality

$$\begin{aligned} &(\boldsymbol{x}_1 - \boldsymbol{x}_2)^{\mathrm{T}}\boldsymbol{P}(\boldsymbol{f}(\boldsymbol{x}_1, \varphi) - \boldsymbol{f}(\boldsymbol{x}_2, \varphi)) \\ &\quad \le -\alpha(\boldsymbol{x}_1 - \boldsymbol{x}_2)^{\mathrm{T}}\boldsymbol{P}(\boldsymbol{x}_1 - \boldsymbol{x}_2), \end{aligned} \tag{A.6}$$

holds for all $\varphi \in \mathbb{R}^m$ and all $\boldsymbol{x}_1, \boldsymbol{x}_2 \in \mathcal{D}$. Consider the quadratic function $V(\boldsymbol{x}_1, \boldsymbol{x}_2) = \frac{1}{2}(\boldsymbol{x}_1 - \boldsymbol{x}_2)^{\mathrm{T}}\boldsymbol{P}(\boldsymbol{x}_1 - \boldsymbol{x}_2)$. The derivative of V along any two solutions $\boldsymbol{x}_1(t)$ and $\boldsymbol{x}_2(t)$ of system (A.5) satisfies

$\dot{V} = (\boldsymbol{x}_1 - \boldsymbol{x}_2)^{\mathrm{T}}\boldsymbol{P}(\boldsymbol{f}(\boldsymbol{x}_1, \varphi) - \boldsymbol{f}(\boldsymbol{x}_2, \varphi)) \leq -2\alpha V$, for all $t \geq t_0$ and all $\boldsymbol{x}_1, \boldsymbol{x}_2 \in \mathcal{D}$. The latter inequality, in turn, implies (see Pavlov et al. (2007) for technical details) that any two solutions $\boldsymbol{x}_1(t)$ and $\boldsymbol{x}_2(t)$ of system (A.5) satisfy

$$|\boldsymbol{x}_1(t) - \boldsymbol{x}_2(t)| \leq C_1 \mathrm{e}^{-\alpha(t-t_0)}|\boldsymbol{x}_1(t_0) - \boldsymbol{x}_2(t_0)|, \tag{A.7}$$

where the number $C_1 > 0$ depends only on the matrix $\boldsymbol{P}$. Here we exploit the fact that, for stability analysis using smooth Lyapunov functions, inequalities regarding the time-derivatives of the Lyapunov function along solutions of the system are only required to hold in the continuity domain of the discontinuous right-hand side of the system, see Filippov (1988). Now, take $\boldsymbol{x}_1(t) \equiv \boldsymbol{x}(t)$ an arbitrary solution of the closed-loop system (A.5), with initial condition $\boldsymbol{x}(t_0)$, and $\boldsymbol{x}_2(t) \equiv \boldsymbol{x}_d(t)$ the desired solution. Note that we can make such a choice since $\boldsymbol{x}_d(t)$ is a solution of the closed-loop system due to Assumption 1, the choice of the control law (4) and due to the continuity of $\boldsymbol{u}(\boldsymbol{x}, t)$. Therefore, (A.7) yields $|\boldsymbol{x}(t) - \boldsymbol{x}_d(t)| \leq C_1 \mathrm{e}^{-\alpha(t-t_0)}|\boldsymbol{x}(t_0) - \boldsymbol{x}_d(t_0)|$, and the global exponential stability of the desired solution $\boldsymbol{x}_d(t)$ is proved.

A.2. Proof of Theorem 2

Observer (13) can be rewritten as

$$\begin{aligned}\dot{\hat{\boldsymbol{x}}} &= (\boldsymbol{A}_{\hat{\imath}} + \boldsymbol{LC})\hat{\boldsymbol{x}} + \boldsymbol{b}_{\hat{\imath}} + \boldsymbol{Bu}(t) - \boldsymbol{Ly}(t),\\ &= (\boldsymbol{A}_{\hat{\imath}} + \boldsymbol{LC})\hat{\boldsymbol{x}} + \boldsymbol{b}_{\hat{\imath}} + \psi(t),\end{aligned} \tag{A.8}$$

for $\hat{\boldsymbol{x}} \in \Lambda_{\hat{\imath}}, \hat{\imath} = 1, \ldots, l$, and where $\psi(t) = \boldsymbol{Bu}(t) - \boldsymbol{Ly}(t)$. Let us define $\boldsymbol{g}(\hat{\boldsymbol{x}}, \psi) := (\boldsymbol{A}_{\hat{\imath}} + \boldsymbol{LC})\hat{\boldsymbol{x}} + \boldsymbol{b}_{\hat{\imath}} + \psi$ for $\hat{\boldsymbol{x}} \in \Lambda_{\hat{\imath}}, \hat{\imath} = 1, \ldots, l$, where $\boldsymbol{L} = \mathcal{P}_o^{-1}\mathcal{X}$. Using the conditions (10)–(12), we can apply Lemma 1 (in Appendix A.1) to the observer to conclude that the following inequality holds

$$\begin{aligned}&(\hat{\boldsymbol{x}}_1 - \hat{\boldsymbol{x}}_2)^{\mathrm{T}}\mathcal{P}_o(\boldsymbol{g}(\hat{\boldsymbol{x}}_1, \psi) - \boldsymbol{g}(\hat{\boldsymbol{x}}_2, \psi))\\ &\quad \leq -\beta(\hat{\boldsymbol{x}}_1 - \hat{\boldsymbol{x}}_2)^{\mathrm{T}}\mathcal{P}_o(\hat{\boldsymbol{x}}_1 - \hat{\boldsymbol{x}}_2),\end{aligned} \tag{A.9}$$

for all $\psi \in \mathbb{R}^n$ and all $\hat{\boldsymbol{x}}_1, \hat{\boldsymbol{x}}_2 \in \mathcal{D}$ and for some $\beta > 0$ and for the matrix $\mathcal{P}_o$ satisfying (10), (12).

In the same way as in the proof of Theorem 1, this implies that any two solutions $\hat{\boldsymbol{x}}_1(t)$ and $\hat{\boldsymbol{x}}_2(t)$ of system (13) satisfy

$$|\hat{\boldsymbol{x}}_1(t) - \hat{\boldsymbol{x}}_2(t)| \leq C_2 \mathrm{e}^{-\beta(t-t_0)}|\hat{\boldsymbol{x}}_1(t_0) - \hat{\boldsymbol{x}}_2(t_0)|, \tag{A.10}$$

where the number $C_2 > 0$ depends only on the matrix $\mathcal{P}_o$. Now, take $\hat{\boldsymbol{x}}_1(t) \equiv \hat{\boldsymbol{x}}(t)$ an arbitrary solution of the observer (13), with initial condition $\hat{\boldsymbol{x}}(t_0)$, and $\hat{\boldsymbol{x}}_2(t) \equiv \boldsymbol{x}(t)$ a solution of system (1), with initial condition $\boldsymbol{x}(t_0)$. Note that we can make such a choice since $\boldsymbol{x}(t)$ is a solution of the observer dynamics (13). Therefore, it holds that (A.10) yields $|\hat{\boldsymbol{x}}(t) - \boldsymbol{x}(t)| \leq C_2 \mathrm{e}^{-\beta(t-t_0)}|\hat{\boldsymbol{x}}(t_0) - \boldsymbol{x}(t_0)|$. Hence, the global exponential stability of the observer error dynamics is proved.

A.3. Proof of Theorem 3

Consider the PWA system (1) in closed-loop with the controller (14). Let us define the extended state vector for this closed-loop system by $\boldsymbol{x}_e := \begin{bmatrix}\boldsymbol{x}^{\mathrm{T}} & \hat{\boldsymbol{x}}^{\mathrm{T}}\end{bmatrix}^{\mathrm{T}}$. Moreover, we define the function $\gamma(\boldsymbol{x}) := \boldsymbol{K}_i\boldsymbol{x} + \boldsymbol{d}_i$, for $\boldsymbol{x} \in \Lambda_i$, $i = 1, \ldots, l$. Note that, due to the satisfaction of (8) and (9), $\gamma(\boldsymbol{x})$ is a continuous function (see Remark 1). Since it is piecewise affine with a finite number of modes, it is globally Lipschitz; i.e. there exists a bounded scalar $\rho > 0$ such that

$$|\gamma(\hat{\boldsymbol{x}}) - \gamma(\boldsymbol{x})| \leq \rho|\hat{\boldsymbol{x}} - \boldsymbol{x}|, \quad \forall \boldsymbol{x}, \hat{\boldsymbol{x}}. \tag{A.11}$$

With this definition of $\gamma(\boldsymbol{x})$, we can rewrite the third equation in the control law (14) as follows:

$$\begin{aligned}\boldsymbol{u} &= \gamma(\hat{\boldsymbol{x}}) - \gamma(\boldsymbol{x}_d) + \boldsymbol{u}_{ff}(t)\\ &= \gamma(\boldsymbol{x}) - \gamma(\boldsymbol{x}_d) + \boldsymbol{u}_{ff}(t) + \gamma(\hat{\boldsymbol{x}}) - \gamma(\boldsymbol{x}).\end{aligned} \tag{A.12}$$

Substituting (A.12) in (1) yields $\dot{\boldsymbol{x}} = \boldsymbol{f}(\boldsymbol{x}, \varphi(t)) + \boldsymbol{B}(\gamma(\hat{\boldsymbol{x}}) - \gamma(\boldsymbol{x}))$, where $\boldsymbol{f}(\boldsymbol{x}, \varphi(t))$ is defined in (A.5).

Consider the Lyapunov function candidate V defined by $V(\boldsymbol{x}_e, \boldsymbol{x}_d) = \frac{1}{2}(\boldsymbol{x} - \boldsymbol{x}_d)^{\mathrm{T}}\boldsymbol{P}(\boldsymbol{x} - \boldsymbol{x}_d) + \frac{\kappa}{2}(\hat{\boldsymbol{x}} - \boldsymbol{x})^{\mathrm{T}}\mathcal{P}_o(\hat{\boldsymbol{x}} - \boldsymbol{x})$, with $\boldsymbol{P} = \mathcal{P}_c^{-1}$. The derivative of V along any solution $\boldsymbol{x}_e(t) = \begin{bmatrix}\boldsymbol{x}^{\mathrm{T}}(t) & \hat{\boldsymbol{x}}^{\mathrm{T}}(t)\end{bmatrix}^{\mathrm{T}}$ of the closed-loop system (1), (14) satisfies

$$\begin{aligned}\dot{V} &= (\boldsymbol{x} - \boldsymbol{x}_d)^{\mathrm{T}}\boldsymbol{P}\left(\boldsymbol{f}(\boldsymbol{x}, \varphi(t)) - \boldsymbol{f}(\boldsymbol{x}_d, \varphi(t)) + \boldsymbol{B}(\gamma(\hat{\boldsymbol{x}}) - \gamma(\boldsymbol{x}))\right)\\ &\quad + \kappa(\hat{\boldsymbol{x}} - \boldsymbol{x})^{\mathrm{T}}\mathcal{P}_o\left(\boldsymbol{g}(\hat{\boldsymbol{x}}, \psi(t)) - \boldsymbol{g}(\boldsymbol{x}, \psi(t))\right).\end{aligned} \tag{A.13}$$

for all $t \geq t_0$ and $\boldsymbol{x}, \boldsymbol{x}_d, \hat{\boldsymbol{x}} \in \mathcal{D}$ (recall that $\mathcal{D}$ consists of the interior points of all cells Λ_i). At this point, we consider $\dot{V}$ as a function of $\boldsymbol{x}, \boldsymbol{x}_d, \hat{\boldsymbol{x}}$ and t which is well-defined for all $t \geq t_0$ and $\boldsymbol{x}, \boldsymbol{x}_d, \hat{\boldsymbol{x}} \in \mathcal{D}$. Using (A.6), (A.9) and (A.11) in (A.13) gives

$$\begin{aligned}\dot{V} &\leq -\alpha(\boldsymbol{x} - \boldsymbol{x}_d)^{\mathrm{T}}\boldsymbol{P}(\boldsymbol{x} - \boldsymbol{x}_d)\\ &\quad - \kappa\beta(\hat{\boldsymbol{x}} - \boldsymbol{x})^{\mathrm{T}}\mathcal{P}_o(\hat{\boldsymbol{x}} - \boldsymbol{x}) + \sigma|\boldsymbol{x} - \boldsymbol{x}_d||\hat{\boldsymbol{x}} - \boldsymbol{x}|.\end{aligned} \tag{A.14}$$

with $\sigma := \|\boldsymbol{P}\|\|\boldsymbol{B}\|\rho$. Denote $|\boldsymbol{x} - \boldsymbol{x}_d|_{\boldsymbol{P}}^2 = (\boldsymbol{x} - \boldsymbol{x}_d)^{\mathrm{T}}\boldsymbol{P}(\boldsymbol{x} - \boldsymbol{x}_d)$ and $|\hat{\boldsymbol{x}} - \boldsymbol{x}|_{\mathcal{P}_o}^2 = (\hat{\boldsymbol{x}} - \boldsymbol{x})^{\mathrm{T}}\mathcal{P}_o(\hat{\boldsymbol{x}} - \boldsymbol{x})$. By using that $2|\boldsymbol{x} - \boldsymbol{x}_d|_{\boldsymbol{P}}|\hat{\boldsymbol{x}} - \boldsymbol{x}|_{\mathcal{P}_o} \leq \lambda|\boldsymbol{x} - \boldsymbol{x}_d|_{\boldsymbol{P}}^2 + \frac{1}{\lambda}|\hat{\boldsymbol{x}} - \boldsymbol{x}|_{\mathcal{P}_o}^2$, for any scalar $\lambda > 0$, and choosing $\lambda = \frac{2\alpha}{\bar{\sigma}}$ and $\kappa = \frac{\bar{\sigma}^2}{2\alpha\beta}$, with $\bar{\sigma} = \sigma\left(\lambda_{\min}(\boldsymbol{P})\lambda_{\min}(\mathcal{P}_o)\right)^{-\frac{1}{2}}$, we can show that

$$\dot{V} \leq -\frac{\alpha}{2}(\boldsymbol{x} - \boldsymbol{x}_d)^{\mathrm{T}}\boldsymbol{P}(\boldsymbol{x} - \boldsymbol{x}_d) - \frac{\kappa\beta}{2}(\hat{\boldsymbol{x}} - \boldsymbol{x})^{\mathrm{T}}\mathcal{P}_o(\hat{\boldsymbol{x}} - \boldsymbol{x}), \tag{A.15}$$

or $\dot{V} \leq -\delta V$, with $\delta = \min(\alpha, \beta) > 0$ and for all $t \geq t_0$ and $\boldsymbol{x}, \boldsymbol{x}_d, \hat{\boldsymbol{x}} \in \mathcal{D}$. The latter inequality, in turn, implies (see Pavlov et al. (2007) for technical details) that solution $\boldsymbol{x}_e(t) = \begin{bmatrix}\boldsymbol{x}_d^{\mathrm{T}}(t) & \boldsymbol{x}_d^{\mathrm{T}}(t)\end{bmatrix}^{\mathrm{T}}$ is a globally exponentially stable solution of the closed-loop system (1), (14), i.e. the tracking problem is solved.

References

Apkarian, P., Gahinet, P., & Becker, G. (1995). Self-scheduled H-infinity control of linear parameter-varying systems — a design example. *Automatica*, *31*(9), 1251–1261.

Arcak, M., & Kokotović, P. (2001). Observer-based control of systems with slope-restricted nonlinearities. *IEEE Transactions on Automatic Control*, *46*, 1–5.

Bemporad, A., & Morari, M. (1999). Control of systems integrating logic, dynamics, and constraints. *Automatica*, *35*(3), 407–427.

Carmona, V., Freire, E., Ponce, E., & Torres, F. (2002). On simplifying and classifying piecewise-linear systems. *IEEE Transactions on Circuits and Systems I-Fundamental Theory and Applications*, *49*(5), 609–620.

Chen, M., Zhu, C., & Feng, G. (2004). Linear-matrix-inequality-based approach to H_∞ controller synthesis of uncertain continuous-time piecewise linear systems. *IEEE Proceeding-Control Theory and Applications*, *151*(3), 295–301.

de Souza, C. E., & Trofino, A. (2006). Gain-scheduled H-2 controller synthesis for linear parameter varying systems via parameter-dependent Lyapunov functions. *International Journal of Robust And Nonlinear Control*, *16*(5), 243–257.

Feng, G. (2002). Controller design and analysis of uncertain piecewise-linear systems. *IEEE Transactions on Circuits and Systems I: Fundamental Theory and Applications*, *49*(2), 224–232.

Filippov, A. (1988). *Differential equations with discontinuous righthand sides. Mathematics and its applications*. Dordrecht: Kluwer Academic.

Habets, L. C. G. J. M., & van Schuppen, J. H. (2004). A control problem for affine dynamical systems on a full-dimensional polytope. *Automatica*, *40*(1), 21–35.

Heemels, W., Weiland, S., & Juloski, A. (2007). Input-to-state stability of discontinuous dynamical systems with an observer-based control application. In A. Bemporad, A. Bicchi, & G. Buttazzo (Eds.), *Lecture notes in computer science, 10th int. workshop on hybrid systems, computation and control 2007* (pp. 259–272). Berlin: Springer.

Heemels, W. P. M. H., Camlibel, M. K., & Schumacher, J. M. (2002). On the dynamic analysis of piecewise-linear networks. *IEEE Transactions on Circuits and Systems I-Fundamental Theory and Applications*, *49*(3), 315–327.

Johansson, M. (2002). *Lecture notes in control and information sciences*: *Vol. 284. Piecewise linear control systems — A computational approach*. Heidelberg, Germany: Springer-Verlag.

Johansson, M., & Rantzer, A. (1998). Computation of piecewise quadratic Lyapunov functions for hybrid systems. *IEEE Transactions on Automatic Control*, *43*, 555–559.

Juloski, A., Heemels, W., & Weiland, S. (2002). Observer design for a class of piecewise affine systems. In *Proceedings of the 41st IEEE conference on decision and control* (pp. 2606–2611).

Juloski, A., Heemels, W., & Weiland, S. (2005). Observer design for Lur'e systems with multi-valued mappings. In: *Proceedings of the IFAC world congress 2005*.

Juloski, A., Heemels, W., & Weiland, S. (2007). Output feedback control for a class of piecewise linear systems. In *Proceedings of the American control conference 2007*.

Leine, R. I., & Nijmeijer, H. (2004). *Lecture notes in applied mechanics*: *Vol. 18. Dynamics and bifurcations of non-smooth mechanical systems*. Berlin: Springer Verlag.

Mosterman, P., & Biswas, G. (2000). Towards procedures for systematically deriving hybrid models of complex systems. In N. Lynch, & B. Kroch (Eds.), *Lecture notes in computer science*, *Hybrid systems: Computation and control* (pp. 324–337). Berlin: Springer.

Pavlov, A., Pogromsky, A., van de Wouw, N., & Nijmeijer, H. (2007). On convergence properties of piecewise affine systems. *International Journal of Control*, *80*(8), 1233–1247.

Pavlov, A., van de Wouw, N., & Nijmeijer, H. (2005). *Systems & control: Foundations and applications (SC) series*, *Uniform output regulation of nonlinear systems: A convergent dynamics approach*. Boston: Birkhäuser.

Rodrigues, L., & Boyd, S. (2005). Piecewise-affine state feedback for piecewise-affine slab systems using convex optimization. *Systems & Control Letters*, *54*(9), 835–853.

Rodrigues, L., & How, J. (2003). Observer-based control of piecewise-affine systems. *International Journal of Control*, *76*(5), 459–477.

Sakurama, K., & Sugie, T. (2005). Trajectory tracking control of bimodal piecewise affine systems. *International Journal of Control*, *78*(16), 1314–1326.

Sontag, E. (1981). Nonlinear regulation: The piecewise linear approach. *IEEE Transactions on Automatic Control*, *26*, 346–358.

Voros, J. (2002). Modeling and parameter identification of systems with multisegment piecewise-linear characteristics. *IEEE Transactions on Automatic Control*, *47*(1), 184–188.

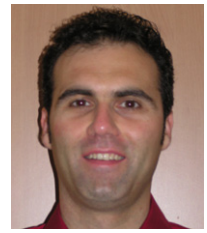

N. van de Wouw (born, 1970) obtained his M.Sc.-degree and Ph.D.-degree in Mechanical Engineering from the Eindhoven University of Technology, Eindhoven, the Netherlands, in 1994 and 1999, respectively. From 1999 until now he has been affiliated with the Department of Mechanical Engineering of the Eindhoven University of Technology in the group of Dynamics and Control as an assistant/associate professor. In 2000, Nathan van de Wouw has been working at Philips Applied Technologies, Eindhoven, The Netherlands, and, in 2001, he has been working at the Netherlands Organisation for Applied Scientific Research (TNO), Delft, The Netherlands. He has held a visiting research position at the University of California Santa Barbara, USA, in 2006/2007. Nathan van de Wouw has published 29 publications in international journals, 5 book contributions and 50 refereed proceedings contributions at international conferences. Recently he published the books 'Uniform Output Regulation of Nonlinear Systems: A convergent Dynamics Approach' with A.V. Pavlov and H. Nijmeijer (Birkhäuser, 2005) and 'Stability and Convergence of Mechanical Systems with Unilateral Constraints' with R.I. Leine (Springer-Verlag, 2008). His current research interests are the analysis and control of non-smooth systems and networked control systems.

A. Pavlov (born 1976) received the M.Sc. degree (cum laude) in Applied Mathematics from St. Petersburg State University, Russia in 1998. In 1999 he was a part-time researcher in the group Control of Complex Systems at the Institute for Problems of Mechanical Engineering, Russian Academy of Sciences. In 2000 he was a visiting research scientist at Ford Research Laboratory, Dearborn, USA. In 2004 he received the Ph.D. degree in Mechanical Engineering from Eindhoven University of Technology, The Netherlands. Currently he holds an Assistant Professor position at the Norwegian University of Science and Technology, Department of Engineering Cybernetics. Alexey Pavlov has co-authored 44 journal and conference publications, 2 patents and a monograph "Uniform output regulation of nonlinear systems: A convergent dynamics approach" (Birkhäuser, 2005). His research interests include control of nonlinear and hybrid systems, nonlinear output regulation theory, convergent systems, and cooperative control.