Preprints, 12th IFAC Workshop on Time Delay Systems
June 28-30, 2015. Ann Arbor, MI, USA

Fault Tolerance of Cooperative Vehicle Platoons Subject to Communication Delay

Jeroen Ploeg * **Nathan van de Wouw** ** **Henk Nijmeijer** ***

* *Netherlands Organization for Applied Scientific Research TNO, Helmond, The Netherlands (e-mail: jeroen.ploeg@tno.nl).*
** *Department of Mechanical Engineering, Eindhoven University of Technology, Eindhoven, The Netherlands (e-mail: n.v.d.wouw@tue.nl)*
*** *Department of Mechanical Engineering, Eindhoven University of Technology, Eindhoven, The Netherlands (e-mail: h.nijmeijer@tue.nl)*

Abstract: Cooperative Adaptive Cruise Control (CACC) employs wireless intervehicle communication to allow for automatic vehicle following at small intervehicle distances while guaranteeing string stability. Inherent to the CACC concept, however, is its vulnerability to communication impairments, among which latency of the wireless link, which compromise string stability and, hence, safety. To investigate the sensitivity of the string stability property with respect to communication latency, two controllers are developed by means of $\mathcal{H}_\infty$ controller synthesis, employing a one-vehicle look-ahead and a two-vehicle look-ahead communication topology, respectively. The string stability properties of the controlled vehicle platoon are investigated, based on which it is proposed to switch from one- to two-vehicle look-ahead when the latency exceeds a certain threshold, thereby creating robustness against increasing communication delay by retaining string stability at the lowest possible time gap.

Keywords: Cooperative adaptive cruise control, H-infinity control, string stability, communication networks, vehicle platoons.

1. INTRODUCTION

Adaptive Cruise Control (ACC) is a longitudinal vehicle-following control system that keeps a desired distance to the preceding vehicle (Piao and McDonald, 2008). To this end, onboard sensors are employed, such as radar, which measure the intervehicle distance and its rate of change. When, in addition, information of the preceding vehicle(s) is cast through a wireless communication link, the control system is commonly referred to as Cooperative Adaptive Cruise Control (CACC). Employing wireless communication significantly enhances the performance compared to ACC, in terms of minimizing the intervehicle distance while guaranteeing string stability, i.e., shock wave attenuation in upstream direction (Seiler et al., 2004). As a result, traffic throughput is increased, while maintaining a sufficient level of safety (Shladover et al., 2012), although string-stable behavior *per se* does not guarantee the avoidance of collisions. In addition, significant fuel savings are possible, especially for trucks (Ramakers et al., 2009).

The wireless link is, however, subject to packet loss, e.g., due to obstruction of the line-of-sight or multi-path effects (Bergenhem et al., 2012). Another important impairment, being the focus of this paper, is latency, caused by message handling routines and asynchronicity of computers in different vehicles. This (possibly time varying) delay significantly compromises string stability, as shown in Naus et al. (2010). The relation between communication latency and CACC performance in terms of string stability already attracted interest, see, e.g., Liu et al. (2001), which investigates the effects of delay on string stability for a communication topology involving both the directly preceding vehicle the lead vehicle of the platoon. Employing the same communication topology, Fernandes and Nunes (2012) provide a detailed analysis of various information-updating schemes of the communication protocol subject to delay, whereas Öncü (2014) developed an analysis framework incorporating uncertain sampling intervals and delays in a sampled-data context.

The focus in this paper is on the design of CACC functionality for a one-vehicle look-ahead and a two-vehicle look-ahead communication topology, and on the subsequent analysis of the effects of a (slowly) varying communication delay on string stability for both topologies. In particular, the minimum time gap for which string-stable behavior can be achieved is determined, as a function of the communication delay. This forms the basis for a fault-tolerance strategy in case the actual communication delay exceeds the design value, which involves switching between the topologies. In addition, it is shown that above a certain delay threshold, the use of wireless communication is no longer beneficial in view of string stability. Here, an $\mathcal{H}_\infty$ optimal controller design approach is adopted, since this allows to *a priori* include the string stability requirement as a design specification, as opposed to, e.g., a consensus-seeking approach (Bernardo et al., 2015).

The outline of this paper is as follows. Section 2 introduces the vehicle model and formulates the control problem. Next, Section 3 presents the controller design for the aforementioned communication topologies. Section 4 then

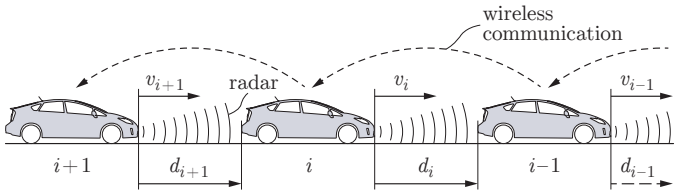

Fig. 1. CACC-equipped homogeneous vehicle platoon.

analyses the effects of communication delay on string stability and proposes a fault-tolerance strategy. Finally, Section 5 summarizes the main conclusions.

2. CONTROL PROBLEM FORMULATION

Consider a homogeneous platoon of m vehicles, as depicted in Fig. 1, where d_i is the distance between vehicle i and its preceding vehicle $i-1$, and v_i is the velocity of vehicle i. The main (tracking) control objective is to regulate d_i to a desired distance $d_{\mathrm{r},i}$. Adopting the constant time gap spacing policy, which is known to improve string stability (Naus et al., 2010), the desired distance is chosen as

$$d_{\mathrm{r},i}(t) = r_i + hv_i(t), \quad i \in S_m \backslash \{1\}, \tag{1}$$

where h is the time gap and r_i the standstill distance. The set of all vehicles in a platoon of length $m \in \mathbb{N}$ is denoted by $S_m = \{i \in \mathbb{N} \mid 1 \leq i \leq m\}$. This paper focusses on homogeneous platoons, which is why h does not depend on the vehicle index. The spacing error e_i is then equal to

$$\begin{aligned} e_i(t) &= d_i(t) - d_{\mathrm{r},i}(t) \\ &= \big(q_{i-1}(t) - q_i(t) - L_i\big) - \big(r_i + hv_i(t)\big), \end{aligned} \tag{2}$$

where q_i is the rear-bumper position of vehicle i, and L_i is its length. Consequently, the tracking objective is formulated as

$$a_1(t) = 0 \;\forall\, t \geq 0 \;\Rightarrow\; \lim_{t\to\infty} e_i(t) = 0 \;\forall\, i \in S_m \backslash \{1\}, \tag{3}$$

where a_1 is the acceleration of the lead vehicle. In other words, with the first vehicle driving at a constant velocity, the spacing errors e_i must converge to zero.

To formulate the string stability requirement in the Laplace domain, the vehicle dynamics are also described in the Laplace domain by the transfer function $G(s)$, with $s \in \mathbb{C}$, according to

$$G(s) = \frac{q_i(s)}{u_i(s)} = \frac{1}{s^2(\tau s + 1)} e^{-\phi s}, \tag{4}$$

where τ is a time constant and ϕ a time delay, together representing the drive line dynamics. u_i is the vehicle input, which can be interpreted as the desired acceleration, whereas the position q_i is the output. This vehicle model is shown to adequately describe the dynamics of an acceleration-controlled vehicle in Ploeg et al. (2014). Note that, slightly abusing formal mathematical notation, $\cdot(s)$ denotes the Laplace transform of the corresponding time-domain variable $\cdot(t)$. Due to the homogeneity assumption, $G(s)$ is identical for all vehicles. Next, formulating the spacing error e_i in (2) in the Laplace domain yields

$$e_i(s) = q_{i-1}(s) - H(s)q_i(s) \tag{5}$$

with $H(s) = hs+1$. Without loss of generality, $r_i = L_i = 0$ is chosen.

Following Ploeg et al. (2014), the controller of each vehicle is designed according to

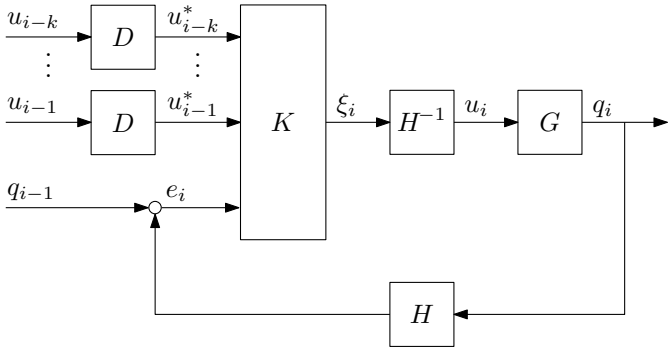

Fig. 2. CACC with k-vehicle look-ahead topology.

$$\begin{aligned} u_i(s) &= H^{-1}(s)K(s) \begin{pmatrix} e_i(s) \\ u^*_{i-1}(s) \\ \vdots \\ u^*_{i-k}(s) \end{pmatrix} \\ &=: H^{-1}(s)\xi_i(s) \end{aligned} \tag{6}$$

with $K(s) = \big(K_{\mathrm{fb}}(s)\; K_{\mathrm{ff},1}(s)\; \ldots\; K_{\mathrm{ff},k}(s)\big)$, where $K_{\mathrm{fb}}(s)$ denotes the feedback control law and $K_{\mathrm{ff},j}(s)$, $j = 1, 2, \ldots, k$, are the feedforward controllers. $\xi_i(s)$ is the output of the controller $K(s)$ and u^*_{i-j}, $j = 1, 2, \ldots, k$, are the inputs of k preceding vehicles, obtained through wireless intervehicle communication. The wireless communication has a latency θ, i.e., $u^*_{i-j}(t) = u_{i-j}(t-\theta)$, which, in the Laplace domain, corresponds to $u^*_{i-j}(s) = D(s)u_{i-j}(s)$ with $D(s) = e^{-\theta s}$. This latency is independent of the vehicle index because messages are sent to all vehicles at the same time (i.e., broadcast), instead of forwarding them from one vehicle to the next (unicast). Obviously, (6) only holds for vehicles $i > k$. In case $i \leq k$, $K(s)$ is adapted to only take the $i-1$ preceding vehicles into account. Furthermore, $K(s)$ is desired to be independent of the vehicle index (for $i > k$), thus not requiring any specific order of the vehicles in the platoon. As a result, a CACC vehicle can be represented by the block scheme as shown in Fig. 2. As can be seen in this figure, $H(s)$ in (5) is located in the feedback loop, which is canceled by the precompensator $H^{-1}(s)$ in (6), such that the driver can select any time gap h without affecting the loop gain.

Since u_1 is the external input to the entire string, it is possible to formulate transfer functions $P_i(s)$, $i \in S_m$, from this input to any output of interest y_i, i.e.,

$$y_i(s) = P_i(s)u_1(s), \quad \forall\, i \in S_m. \tag{7}$$

In terms of input–output stability, the notion of string stability can then be described as a bounded response of the output y_i, for all $i \in S_m$, to the input u_1 for any string length $m \in \mathbb{N}$, thus including the infinite-length string (Ploeg et al., 2014). For vehicle platooning, a physically relevant choice for y_i would, e.g., be the spacing error e_i. In practice, however, the stronger requirement of attenuation in upstream direction of the response to disturbances in u_1 is imposed on vehicle platoons. To formulate this stronger requirement, referred to as *strict* string stability, a propagation transfer function $\Gamma_i(s)$ is introduced, according to

$$\begin{aligned} y_i(s) &= P_i(s)P_{i-1}^{-1}(s)y_{i-1}(s) \\ &=: \Gamma_i(s)y_{i-1}(s), \quad \forall\, i \in S_m, \end{aligned} \tag{8}$$

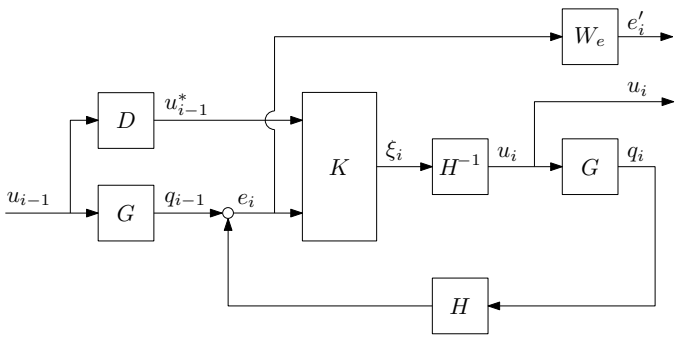

Fig. 3. CACC with one-vehicle look-ahead topology.

assuming $P_{i-1}^{-1}(s)$ exists. Note that $\Gamma_i(s)$ is a complementary sensitivity transfer function, describing the disturbance propagation being relevant to string stability, which is why this type of transfer function is referred to as the *string stability complementary sensitivity* (SSCS) in this paper. Adopting the induced $\mathcal{L}_2$ norm as a measure for disturbance attenuation, the following condition for strict string stability now holds (Ploeg et al., 2014).

Condition 1. (Strict $\mathcal{L}_2$ string stability). The system (7) is strictly $\mathcal{L}_2$ string stable with respect to its input u_1 if and only if

$$\|P_1(s)\|_{\mathcal{H}_\infty} < \infty \tag{9a}$$
$$\|\Gamma_i(s)\|_{\mathcal{H}_\infty} \leq 1, \quad \forall\, i \in \mathbb{N}\backslash\{1\}. \tag{9b}$$

In addition, the weaker requirement related to disturbance propagation from lead vehicle to follower can also be regarded, to which end the SSCS $\Theta_i(s)$ is introduced:

$$\begin{aligned} y_i(s) &= P_i(s)P_1^{-1}(s)y_1(s) \\ &=: \Theta_i(s)y_1(s), \quad \forall\, i \in S_m, \end{aligned} \tag{10}$$

assuming $P_1^{-1}(s)$ exists. This leads to the following condition for *semi-strict* string stability.

Condition 2. (Semi-strict $\mathcal{L}_2$ string stability). The interconnected system (7) is semi-strictly $\mathcal{L}_2$ string stable with respect to its input u_1 if and only if

$$\|P_1(s)\|_{\mathcal{H}_\infty} < \infty \tag{11a}$$
$$\|\Theta_i(s)\|_{\mathcal{H}_\infty} \leq 1, \quad \forall\, i \in \mathbb{N}\backslash\{1\}. \tag{11b}$$

The control objective (3), combined with either Condition 1 or 2, provides the basis for controller design by means of $\mathcal{H}_\infty$ optimization for the vehicle-following control problem, as presented in the next section.

3. CONTROLLER DESIGN

Since the conditions (9b) and (11b) for (semi-)strict $\mathcal{L}_2$ string stability are concerned with (minimizing) the $\mathcal{H}_\infty$ norm of a transfer function, $\mathcal{H}_\infty$ synthesis (Zhou et al., 1996) is adopted to design controllers for the platoon problem, focussing on a one-vehicle look-ahead topology and subsequently a two-vehicle look-ahead topology. The motivation for the latter is in fault tolerance against larger communication delays, as will become clear in Section 4.

3.1 One-Vehicle Look-Ahead

For a one-vehicle look-ahead topology, the block scheme as shown in Fig. 2 simplifies to the one shown in Fig. 3. Here, the model $q_{i-1}(s) = G(s)u_{i-1}(s)$ of the preceding vehicle is included, clearly indicating that u_{i-1} is the external input of the controlled vehicle i. Note that, due to the homogeneity assumption, $G(s)$ is the same for all vehicles.

In view of the tracking objective (3), the first output of interest is the weighted spacing error $e_i'(s) = W_e(s)e_i(s)$, where $W_e(s)$ is a frequency-dependent weighting function, providing a means to further specify the control objective as commonly employed in $\mathcal{H}_\infty$ controller synthesis. In view of the string stability requirement, u_i is chosen as the second "output" of interest. Consequently, the SSCS, defined in (8), can be formulated as[1] $\Gamma(s) = u_i(s)/u_{i-1}(s)$, with $P_i(s)$ such that $u_i(s) = P_i(s)u_1(s)$. Note that $\Gamma(s)$ appears to be independent of the vehicle index i. The controller design thus aims at achieving strict $\mathcal{L}_2$ string stability, subject to Condition 1, where the inequality (9a) is met by definition since $P_1(s) \equiv 1$.

The (mixed-sensitivity) $\mathcal{H}_\infty$ synthesis now aims to compute a stabilizing controller $K(s) = \begin{pmatrix} K_{\text{fb}}(s) & K_{\text{ff}}(s) \end{pmatrix}$ with

$$\xi_i(s) = \begin{pmatrix} K_{\text{fb}}(s) & K_{\text{ff}}(s) \end{pmatrix} \begin{pmatrix} e_i(s) \\ u_{i-1}^*(s) \end{pmatrix}, \tag{12}$$

such that $\|N(s)\|_{\mathcal{H}_\infty}$ is minimized, where

$$\begin{aligned} \begin{pmatrix} e_i'(s) \\ u_i(s) \end{pmatrix} &= \begin{pmatrix} W_e(s)S(s) \\ \Gamma(s) \end{pmatrix} u_{i-1}(s) \\ &=: N(s)u_{i-1}(s). \end{aligned} \tag{13}$$

Here,

$$S(s) = G(s)\frac{1 - K_{\text{ff}}(s)D(s)}{1 + K_{\text{fb}}(s)G(s)} \tag{14}$$

is the sensitivity and

$$\Gamma(s) = \frac{1}{H(s)}\frac{K_{\text{fb}}(s)G(s) + K_{\text{ff}}(s)D(s)}{1 + K_{\text{fb}}(s)G(s)} \tag{15}$$

represents the disturbance propagation along the string, which is independent of the vehicle index i. From $N(s)$ in (13), it follows that

$$\|N(s)\|_{\mathcal{H}_\infty} = \gamma \;\Rightarrow\; \|\Gamma(s)\|_{\mathcal{H}_\infty} \leq \gamma. \tag{16}$$

According to condition (9b), strict $\mathcal{L}_2$ string stability is thus obtained for any value $\gamma \leq 1$.

To synthesize the controller, the weighting function $W_e(s)$ in (13), which balances vehicle-following performance against string stability, is chosen as $W_e(s) = 1$, thus equally penalizing the amplification of disturbances in u_{i-1} over the entire frequency range. Furthermore, the vehicle parameters are set to $\tau = 0.1\,\text{s}$ and $\phi = 0.2\,\text{s}$, whereas the communication delay is equal to $\theta = 0.02\,\text{s}$. In addition, both the vehicle delay and the communication delay are described by a 3rd-order Padé approximation, yielding a sufficiently accurate model in the frequency interval of interest. Finally, a design time gap $h = 1\,\text{s}$ is chosen, being a common ACC value.

After reduction of the controller order, the $\mathcal{H}_\infty$ optimization yields a 4th-order controller $K(s) = \begin{pmatrix} K_{\text{fb}}(s) & K_{\text{ff}}(s) \end{pmatrix}$. The magnitudes $|K_{\text{fb}}(j\omega)|$ and $|K_{\text{ff}}(j\omega)|$, as a function of the frequency ω, are shown in Fig. 4(a). From this figure, it can be concluded that $K_{\text{fb}}(s)$ is similar to a 1st-order lead–lag filter, whereas $K_{\text{ff}}(s)$ closely resembles a

[1] Since, for a homogeneous string, $u_i(s)/u_{i-1}(s) = a_i(s)/a_{i-1}(s) = e_i(s)/e_{i-1}(s)$, this choice for Γ represents the disturbance propagation for all physically relevant signals.

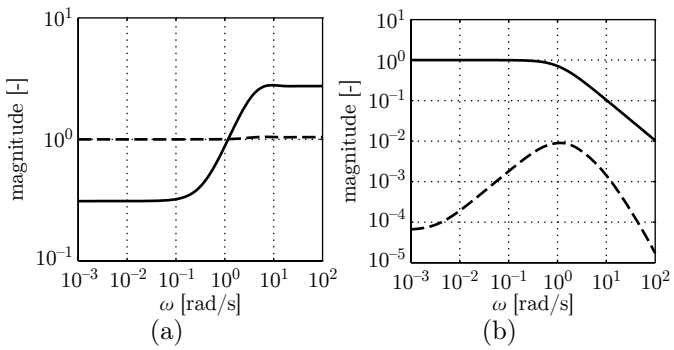

Fig. 4. Frequency response magnitude of (a) $|K_{\mathrm{fb}}(j\omega)|$ (solid) and $|K_{\mathrm{ff}}(j\omega)|$ (dashed), and (b) $|\Gamma(j\omega)|$ (solid) and $|S(j\omega)|$ (dashed).

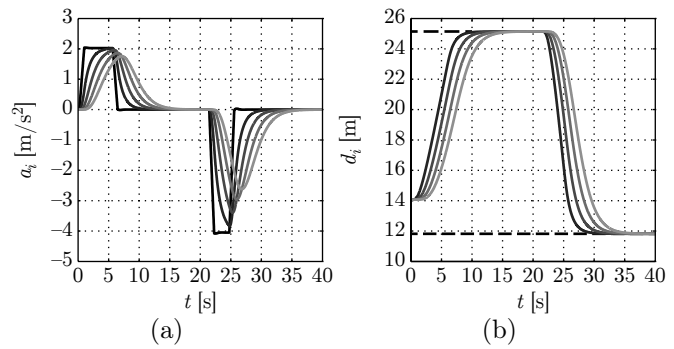

Fig. 5. Time responses of (a) the acceleration $a_i(t)$ and (b) the distance $d_i(t)$ (black–light gray: $i = 1, 2, \ldots$; dashed: desired distance $d_{\mathrm{r},i}(t)$).

constant gain of 1. Fig. 4(b) shows the frequency response magnitudes $|S(j\omega)|$ and $|\Gamma(j\omega)|$, from which it can be seen that $\lim_{\omega\to 0}|S(j\omega)| \approx 0$, hence fulfilling the tracking objective, and $|\Gamma(j\omega)| \leq 1$, thus realizing strict $\mathcal{L}_2$ string stability.

Figure 5 shows the simulated time responses of 5 vehicles for $h = 1$ s, with vehicle 1, which is velocity controlled, performing a smooth velocity change upward and downward, based on a trapezoidal acceleration profile. The acceleration responses (which are very similar to the control actions, given the relatively small values for τ and ϕ) clearly show a decreasing amplitude along the string, indicating strict $\mathcal{L}_2$ string-stable behavior. Furthermore, the distance responses reflect the velocity-dependent spacing policy; from the indicated desired distance, it can be concluded that the tracking objective is reached.

3.2 Two-Vehicle Look-Ahead

In case of a two-vehicle look-ahead topology, one may intuitively expect u_{i-2} to be the external input for vehicle i. However, due to the "overlapping" topology (u_{i-1} depends on u_{i-3}), u_1 appears to be the true external input. Consequently, the controller design for vehicle i involves the behavior of all preceding vehicles. When introducing the input–output relation $u_i(s) = \Theta_i(s)u_1(s)$, describing the propagation from the lead vehicle input to the input of vehicle i, the block scheme for vehicle i as depicted in Fig. 6 is obtained. $\Theta_i(s)$ can be interpreted as the SSCS for semi-strict string stability, defined in (10), with

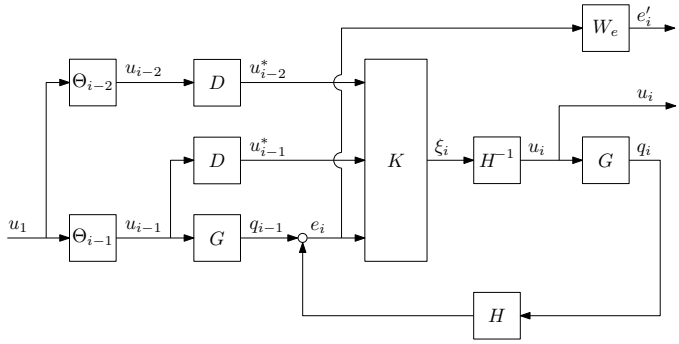

Fig. 6. CACC with two-vehicle look-ahead topology.

$P_i(s) = \Theta_i(s)$. Consequently, u_1 is chosen as the input and u_i as the output in order to cast the string stability problem into the $\mathcal{H}_\infty$ synthesis framework. Again choosing the weighted distance error e_i' as exogenous output in view of the tracking objective, the mixed-sensitivity $\mathcal{H}_\infty$ control problem now involves computing a stabilizing controller $K(s) = \begin{pmatrix} K_{\mathrm{fb}}(s) & K_{\mathrm{ff},1}(s) & K_{\mathrm{ff},2}(s) \end{pmatrix}$ according to

$$\xi_i(s) = \begin{pmatrix} K_{\mathrm{fb}}(s) & K_{\mathrm{ff},1}(s) & K_{\mathrm{ff},2}(s) \end{pmatrix} \begin{pmatrix} e_i(s) \\ u_{i-1}^*(s) \\ u_{i-2}^*(s) \end{pmatrix}, \tag{17}$$

such that $\|N_i(s)\|_{\mathcal{H}_\infty}$ is minimized, with

$$\begin{aligned} \begin{pmatrix} e_i'(s) \\ u_i(s) \end{pmatrix} &= \begin{pmatrix} W_e(s)S_i(s) \\ \Theta_i(s) \end{pmatrix} u_1(s) \\ &=: N_i(s)u_1(s), \quad \forall\, i \in \mathbb{N}\backslash\{1\}. \end{aligned} \tag{18}$$

Here, the sensitivity $S_i(s)$ is equal to (omitting the argument s for readability)

$$S_i = G\frac{(1 - K_{\mathrm{ff},1}D)\,\Theta_{i-1} - K_{\mathrm{ff},2}D\Theta_{i-2}}{1 + K_{\mathrm{fb}}G}, \tag{19}$$

whereas $\Theta_i(s)$, $i \geq 3$, is equal to

$$\Theta_i = \frac{1}{H}\frac{(K_{\mathrm{fb}}G + K_{\mathrm{ff},1}D)\,\Theta_{i-1} + K_{\mathrm{ff},2}D\Theta_{i-2}}{1 + K_{\mathrm{fb}}G} \tag{20}$$

with $\Theta_1(s) = 1$ and $\Theta_2(s) = \Gamma_2(s)$ by definition. Assuming that the second vehicle, having only one preceding vehicle, is controlled using the one-vehicle look-ahead controller from Section 3.1, it follows that $\Gamma_2(s) = \Gamma(s)$ as in (15). The controller design thus naturally aims for semi-strict $\mathcal{L}_2$ string stability, subject to Condition 2, where the inequality (11a) is met since $P_1(s) \equiv 1$. As opposed to the one-vehicle look-ahead case, however, $N_i(s)$ now depends on the vehicle index i, and so will the synthesized controller. In other words, each vehicle in the platoon would have a different controller, which is not very practical. Therefore, a controller is synthesized for the third vehicle only, aiming for $\|N_3(s)\|_{\mathcal{H}_\infty} = 1$. This controller is then applied to all upstream vehicles $i \geq 4$ as well, after which the resulting string stability properties will be analyzed through the assessment of (11b).

The controller is synthesized with the same model parameters, weighting function $W_e(s)$, and design time gap h as mentioned in the previous section, while employing a 3rd-order Padé approximation for the vehicle delay and the communication delay. As a result, a 5th-order controller is obtained, after further controller-order reduction. The magnitudes $|K_{\mathrm{fb}}(j\omega)|$, $|K_{\mathrm{ff},1}(j\omega)|$, and $|K_{\mathrm{ff},2}(j\omega)|$ are shown in Fig. 7(a), which again reveals that $K_{\mathrm{fb}}(s)$ resembles a lead–lag filter, whereas the feedforward gains show

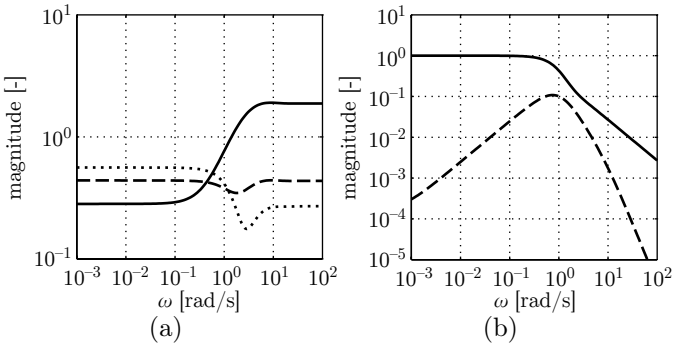

Fig. 7. Frequency response magnitude of (a) $|K_{\mathrm{fb}}(j\omega)|$ (solid), $|K_{\mathrm{ff},1}(j\omega)|$ (dashed), and $|K_{\mathrm{ff},2}(j\omega)|$ (dotted), and (b) $|\Theta_3(j\omega)|$ (solid) and $|S_3(j\omega)|$ (dashed).

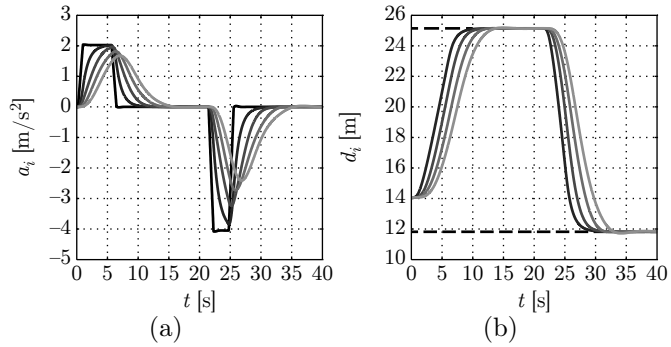

Fig. 8. Time responses of (a) the acceleration $a_i(t)$ and (b) the distance $d_i(t)$ (black–light gray: $i = 1, 2, \ldots$; dashed: desired distance $d_{\mathrm{r},i}(t)$).

that a weighted feedforward of u_1 and u_2 is obtained. Note that $|K_{\mathrm{ff},1}(j\omega) + K_{\mathrm{ff},2}(j\omega)| \to 1$ for $\omega \to 0$. Fig. 7(b) shows the frequency response magnitudes $|S_3(j\omega)|$ and $|\Theta_3(j\omega)|$, from which it can be seen that $\lim_{\omega\to 0} |S_3(j\omega)| = 0$, hence fulfilling the tracking objective, and $|\Theta_3(j\omega)| \leq 1$. Numerical evaluation of $|\Theta_i(j\omega)|$, given in (20), with the synthesized controller K for a large range of vehicle indices, strongly suggests that $\|\Theta_i(s)\|_{\mathcal{H}_\infty} = 1$ for all $i \in \mathbb{N}$, thus indicating semi-strict $\mathcal{L}_2$ string stability.

Fig. 8 shows the time response of 5 vehicles to the same smooth velocity step of vehicle 1 as used in Fig. 5, obtained with $h = 1\,\mathrm{s}$. It appears that both the acceleration response and the distance response are very similar to those of the one-vehicle look-ahead controlled system.

4. COMMUNICATION DELAY ANALYSIS

As already mentioned in Section 1, the wireless intervehicle link is subject to latency due to various causes, among which asynchronous sampling, which inevitably occurs between two different vehicles since their respective control computers are not synchronized. Another important cause of (time-varying) latency, is the mechanism to avoid packet collisions in the ITS G5 communication protocol, which causes the transmitter to resend the message in case the channel was occupied during the first attempt (Ström, 2011). Consequently, although the CACC has been designed using a nominal communication delay (in our case $\theta = 0.02\,\mathrm{s}$), in practice this may be significantly larger. Therefore, this section investigates the influence of the

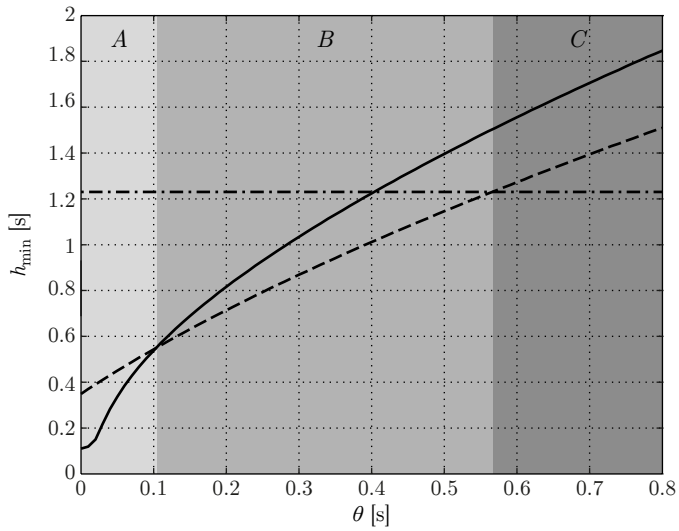

Fig. 9. Minimum string-stable time gap $h_{\min}$ as a function of communication delay θ for one-vehicle look-ahead (solid), two-vehicle look-ahead (dashed), and degraded CACC (dash-dotted).

communication delay θ on string stability, in relation to the time gap h, ultimately resulting in an approach for fault tolerance against increasing delay.

In case of the one-vehicle look-ahead controller, it can be concluded that, without communication delay, string stability is obtained for any (nonnegative) time gap h: With $\theta = 0$, i.e., $D(s) = 1$, while substituting $K_{\mathrm{ff}}(s) = 1$ (being the approximate feedforward gain) in (15), $\Gamma(s) = H^{-1}(s)$ is obtained, hence $\|\Gamma(s)\|_{\mathcal{H}_\infty} = 1$ for all $h \geq 0$. Formulating $\Gamma(s)$ in (15) as $\Gamma(s) = H^{-1}(s)\Gamma'(s)$, with

$$\Gamma'(s) = \frac{K_{\mathrm{fb}}(s)G(s) + K_{\mathrm{ff}}(s)D(s)}{1 + K_{\mathrm{fb}}(s)G(s)}, \tag{21}$$

it can be concluded that, with $\theta > 0$, $|\Gamma'(j\omega)|$ may show a peak value larger than 1. This peak value is effectively decreased by the factor $H^{-1}(s) = 1/(hs + 1)$ in $\Gamma(s)$, the effect of which is smaller for decreasing values of h. Consequently, in the presence of a communication delay, a minimum time gap $h_{\min}$ to obtain string stability must exist. This is confirmed by Fig. 9, which shows $h_{\min}$ as a function of θ, among others for the one-vehicle look-ahead topology. This relation has been obtained numerically, by taking a fixed value for θ and then searching for the smallest value of h, subject to $\|\Gamma(s)\|_{\mathcal{H}_\infty} = 1$ (for the one-vehicle look-ahead case). From this figure, it appears that $h_{\min}$ monotonically increases with increasing θ, as could be intuitively expected. In addition, it also follows that the controlled system is string stable for $h \geq h_{\min} = 0.11\,\mathrm{s}$ in case of the nominal communication delay $\theta = 0.02\,\mathrm{s}$. From a practical perspective, this implies that the driver can choose any time gap $h \geq 0.11\,\mathrm{s}$ without compromising string stability. [2]

Fig. 9 also shows $h_{\min}(\theta)$ for the two-vehicle look-ahead controller, which has been obtained by searching for the smallest time gap, subject to $\|\Theta_3(s)\|_{\mathcal{H}_\infty} = 1$. As can be seen in the figure, it appears that, for higher values of

[2] For $\theta = 0$, Fig. 9 shows that $h_{\min} > 0$, as opposed to $h_{\min} \geq 0$, as concluded earlier. This apparent inconsistency is caused by the fact that $K_{\mathrm{ff}}(s)$ is not exactly equal to 1.

the delay θ, the two-vehicle look-ahead topology allows for smaller string-stable time gaps than the one-vehicle look-ahead topology. However, a break-even point exists at $\theta \approx 0.1\,\mathrm{s}$, below which the one-vehicle look-ahead topology is beneficial in view of string stability. Intuitively, this result can be understood as follows: Without communication delay ($D(s) = 1$), while approximating the feedforward transfer function by $K_{\mathrm{ff}}(s) = 1$, the one-vehicle look-ahead sensitivity (14) is equal to $S = 0$, indicating perfect following behavior. Consequently, additional information, which is obtained from the second preceding vehicle, would not yield additional benefit. On the other hand, for increasing communication delay, one may expect to benefit from the information of the second preceding vehicle at some point, because it provides "preview" disturbance information, given the fact that the delay is (approximately) identical for all vehicles. As a result, the minimum string-stable time gap amounts to $h_{\min} = 0.35\,\mathrm{s}$ in this particular case study for the two-vehicle look-ahead communication topology.

Finally, Fig. 9 also shows the time gap $h_{\min}$ for which string stability is obtained in the case of a controller that utilizes the estimated actual acceleration $\hat{a}_{i-1}$ of the preceding vehicle as a feedforward, instead of the communicated input u^*_{i-1} (see Fig. 3). This particular control strategy, described in more detail in Ploeg et al. (2015), aims for CACC functionality without a wireless link, which is why $h_{\min}$ does not depend on θ. As the figure shows, $h_{\min} = 1.23\,\mathrm{s}$, which appears to lead to the minimum string-stable time gap only for $\theta > 0.57\,\mathrm{s}$.

Summarizing the results, with increasing communication delay, it is beneficial in view of minimum string-stable time gap to successively apply a one-vehicle look-ahead communication topology, a two-vehicle look-ahead topology, and, ultimately, to avoid using communication at all. This is indicated in Fig. 9 by the shaded area's A, B, and C, respectively.

5. CONCLUSION

Controllers for CACC functionality of road vehicles were developed, using $\mathcal{H}_\infty$ controller synthesis. This approach allows for the explicit inclusion of the $\mathcal{L}_2$ string stability requirement in the controller design specification. As a result, strict (i.e., preceding vehicle to follower vehicle) $\mathcal{L}_2$ string-stable behavior was obtained for a one-vehicle look-ahead communication topology, whereas semi-strict (i.e., lead vehicle to follower vehicle) $\mathcal{L}_2$ string-stable behavior was realized for a two-vehicle look-ahead topology.

It was shown that time delay in the wireless intervehicle communication compromises string stability, as a result of which a delay-dependent lower bound on the time gap exists, for which string stability can be obtained. The minimum string-table time gap for both communication topologies was investigated and compared to the minimum time gap in the case of a controller which does not employ a wireless link. As a result, it can be concluded that it is desired to switch from the one-vehicle look-ahead to the two-vehicle look-ahead topology when the time delay exceeds a certain threshold value, whereas for a relatively large time delay, it is preferable to not use wireless communication at all, in view of string stability. These observations, in fact, lead to a mechanism for fault tolerance against increasing communication delay, characterized by actively switching between communication topologies, provided that switching phenomena do not adversely influence string stability. The latter is a topic for further investigation.

REFERENCES

Bergenhem, C., Hedin, E., and Skarin, D. (2012). Vehicle-to-vehicle communication for a platooning system. *Procedia–Social and Behavioral Sciences*, 48(0), 1222–1233. Transport Research Arena 2012.

Bernardo, M., Salvi, A., and Santini, S. (2015). Distributed consensus strategy for platooning of vehicles in the presence of time-varying heterogeneous communication delays. *IEEE Transactions on Intelligent Transportation Systems*, 16(1), 102–112.

Fernandes, P. and Nunes, U. (2012). Platooning with IVC-enabled autonomous vehicles: Strategies to mitigate communication delays, improve safety and traffic flow. *IEEE Transactions on Intelligent Transportation Systems*, 13(1), 91–106.

Liu, X., Goldsmith, A., Mahal, S.S., and Hedrick, J.K. (2001). Effects of communication delay on string stability in vehicle platoons. In *Proceedings of the IEEE Conference on Intelligent Transportation Systems*, 625–630.

Naus, G.J.L., Vugts, R.P.A., Ploeg, J., Molengraft, M.J.G.v.d., and Steinbuch, M. (2010). String-stable CACC design and experimental validation: A frequency-domain approach. *IEEE Transactions on Vehicular Technology*, 59(9), 4268–4279.

Öncü, S. (2014). *String stability of interconnected vehicles: Network-aware modelling, analysis and experiments*. Ph.D. thesis, Eindhoven University of Technology, Eindhoven, The Netherlands.

Piao, J. and McDonald, M. (2008). Advanced driver assistance systems from autonomous to cooperative approach. *Transport Reviews*, 28(5), 659–684.

Ploeg, J., Semsar-Kazerooni, E., Lijster, G., Wouw, N., and Nijmeijer, H. (2015). Graceful degradation of cooperative adaptive cruise control. *IEEE Transactions on Intelligent Transportation Systems*, 16(1), 488–497.

Ploeg, J., Wouw, N.v.d., and Nijmeijer, H. (2014). $\mathcal{L}_p$ string stability of cascaded systems: Application to vehicle platooning. *IEEE Transactions on Control Systems Technology*, 22(2), 786–793.

Ramakers, R., Henning, K., Gies, S., Abel, D., and Max, H. (2009). Electronically coupled truck platoons on German highways. In *Proceedings of the IEEE International Conference on Systems, Man, and Cybernetics*, 2409–2414.

Seiler, P., Pant, A., and Hedrick, K. (2004). Disturbance propagation in vehicle strings. *IEEE Transactions on Automatic Control*, 49(10), 1835–1842.

Shladover, S.E., Su, D., and Lu, X.Y. (2012). Impacts of cooperative adaptive cruise control on freeway traffic flow. In *Proceedings of the 91st TRB Annual Meeting*, 1–17.

Ström, E.G. (2011). On medium access and physical layer standards for cooperative intelligent transport systems in Europe. *Proceedings of the IEEE*, 99(7), 1183–1188.

Zhou, K., Doyle, J.C.C., and Glover, K. (1996). *Robust and Optimal Control*. Prentice Hall, Englewood Cliffs, NJ, USA.